1998

TX 125
TX 200
TX 250
TX 270
TX 320

DIGITAL CONVERSION
RISING SUN IMPORTS INC
UNITED STATES of AMERICA
OCTOBER 2010

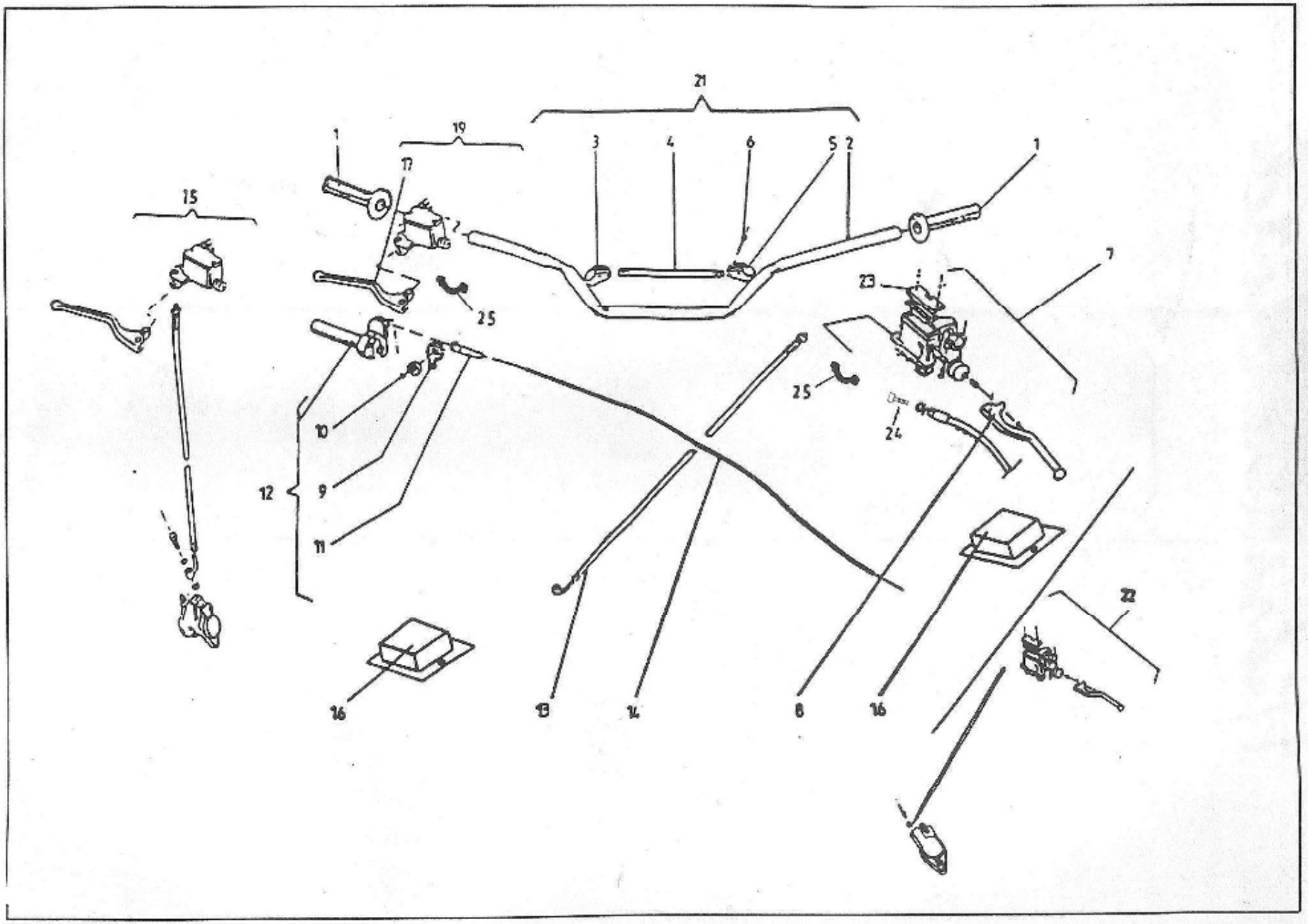
21
19
15
1
17
3
4
6
5
2
1
7
23
25
10
9
11
12
25
24
16
13
14
8
16
22

No.	DESCRIPCION	250 C.C.	270 C.C.	320 C.C.	125 C.C.	200 C.C.	C.
1	JGO. EMPUÑADURAS	G260000					1
2	MANILLAR	B650200					1
3	SOPORTE BARRA MANILLAR DRCHO.	B650004					1
4	BARRA SUJ. MANILLAR	B650003					1
5	SOPORTE BARRA SUJ. MANILLAR IZQ.	B650006					1
6	ALLEN 6X25 TA.EMB,CART,SUSP.	T0306025					4
7	BOMBA EMBRAGUE HIDRAULICO	BT27722009					1
8	MANETA EMBRAGUE HIDRAULICA 97	BT27722040					1
9	TAPA MANDO GAS	E140000					1
10	RODILLO MANDO GAS	E119000					1
11	GUARDAPOLVO PUÑO GAS	G600000					1
12	PUÑO MANDO GAS 1676-03	E100001					1
13	LATIGUILLO EMBRAGUE NEGRO	BT27722003					1
14	CABLE DE GAS	E160002					1
15	CTO.FRENO DEL.LATIG.NEGRO	BT27722108					1
16	KIT BOMBA FRENO DEL.Y EMBRAGUE 97	BT27722208					1
17	MANETA FRENO DELANTERO 97	BT27722045					1
19	BOMBA FRENO DELAN. CON INTER.	BT27722008					1
21	CTO.MANILLAR 97 COMPLETO T= 82cm.	BT27724001C					1
22	CTO.EMBRAGUE NEGRO TRIAL 97	BT27722005					1
23	KIT TAPA BOMBA FRENO Y EMB.97	BT27722210					1
24	TORN.ESP.SUJ.LATIGUILLO A BOMBA AJP	BT27722212					1
25	BRIDA BOMBA NEGRA AJP	BT27722211					1

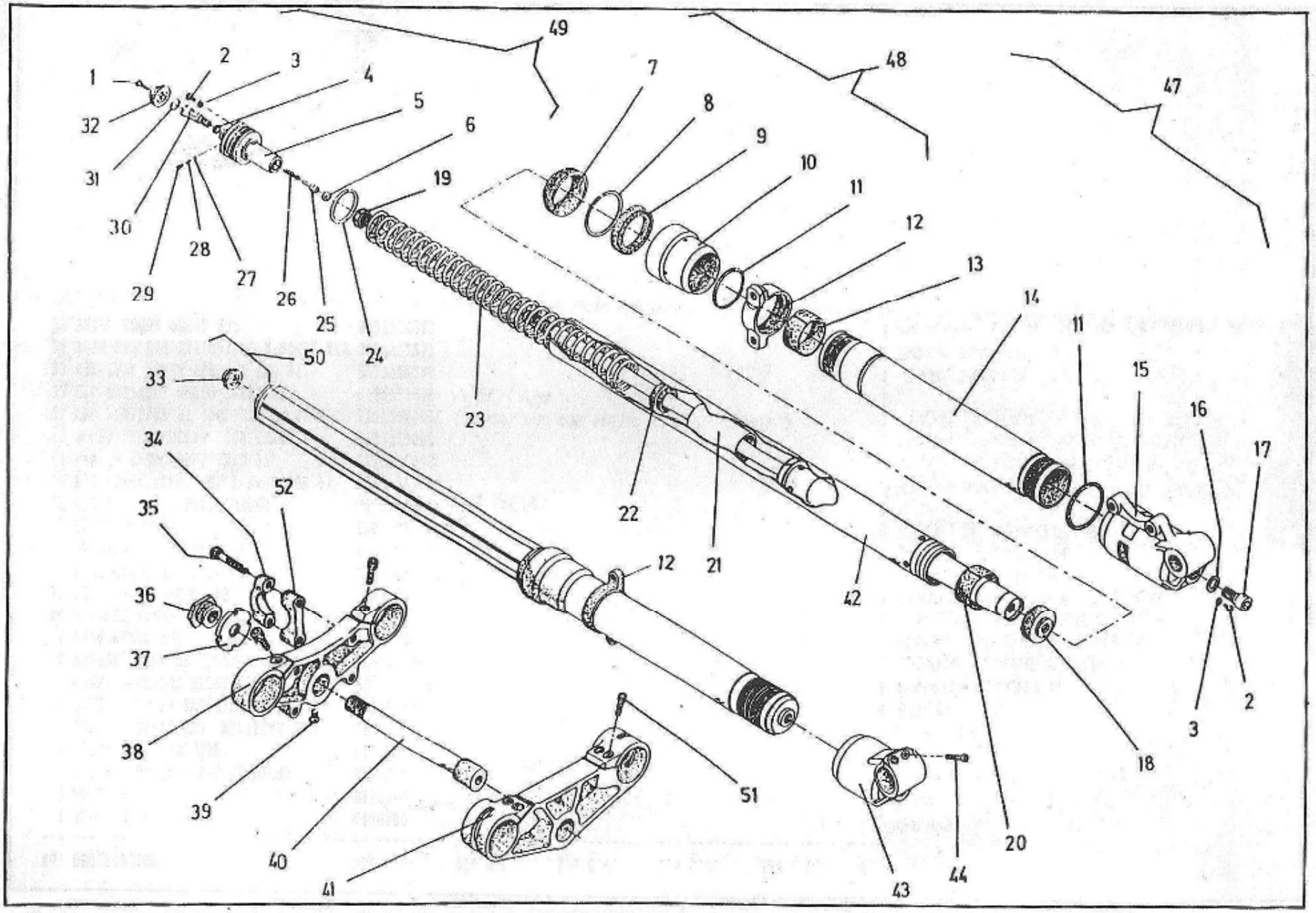
1
2
3
4
5
6
7
8
9
10
11
12
13
14
15
16
17
18
19
20
21
22
23
24
25
26
27
28
29
30
31
32
33
34
35
36
37
38
39
40
41
42
43
44
47
48
49
50
51
52

No.	DESCRIPCION	250 C.C.	270 C.C.	320 C.C.	125 C.C.	200 C.C.	C.
1	TORN.CONICO 3X12 DIN 7991	ST950902					2
2	TORNILLO DIN 7985 M3X0.5	T0610305					4
3	TORICA TORN.AIRE 2.75X1.60	ST950200					4
4	JUNTA TORICA VALV. 3.68X1.80	ST950202					2
5	TAPON BARRA SUSPENSION	ST950503					2
6	TOPE MUELLE REGULADOR	ST950506					2
7	RASCADOR 48 TRIAL-98	ST950219A					2
8	SEEGER DE 48	ST950713					2
9	RETEN 38X48X10	ST950220					2
10	TUBO PORTARETEN DE 48	ST950409					2
11	TORICA PORTA RETEN 44.2X3	ST950214					4
12	BRIDA SOPORTE GUARDABARRO	ST950408					2
13	GLACIER BOTELLA SUSP. 38X41X20	ST950213					2
14	TUBO BOTELLA SUSP.CROMADA	ST950406					2
15	PUNTERA BOTELLA IZRDA.LARGA	ST950302					1
16	ARAND.GOMA INTERIOR.	ST950208					2
17	ALLEN 10X25 DIN 912	T0310025					2
18	CENTRAJE TUBO HIDRA.	ST950522					2
19	TUERCA FIJACION REG. HIDRA.	ST950507					2
20	GLACIER SUSP. 37X39X20	ST950212					2
21	PRECARGA PLASTICO	ST950203					2
22	CASQ. CENT. F6-20X24,9X24,9X33	ST950217					2
23	MUELLE SUSPENSION	ST950703					2
24	TORICA TAPON SUSP. 32.5X2	ST950216					2
25	PISTON REGULACION HIDRA.	ST950505					2
26	MUELLE PRESION HIDRAULICO	ST950702					2
27	BOLA MARCAJE HIDRAULICO D.03	ST950201					2
28	MUELLE GRADUACION HIDRA.	ST950700					2
29	ESPARRAGO MARC.HIDRA, DIN916KN 4X4	ST950904					2
30	CUERPO VALVULA REGULADOR	ST950504					2
31	ANILLO TOPE REGULADOR	ST950701					2
32	REGULADOR HIDRAULICO COMPR.	ST950501					1
33	REGULADOR HIDRAULICO EXT.	ST950502					1
34	BRIDA SUPORTE GUARDABARRO	ST950401					2
35	ALLEN 8X50	T0308050					4
36	TAPON PLATINA SUPERIOR	ST950523					1

37	TUERCA DIRECCION	ST950500					1
38	PLATINA SUPERIOR	ST950300					1
39	ULS 6X12 TOPE FREN,PRO.FIL,	T0506012					1
40	EJE DIRECCION	ST950400					1
41	PLATINA INFERIOR	ST950800					1
42	BARRA SUSPENSION -96 CROMADA	ST950415	ST950415TI	ST950415	ST950415	ST950415	2
43	PUNTERA BOTELLA DRCHA.CORTA	ST950301					1
44	ALLEN ESPECIAL 6X25 UFK.SUSP.	T0316025					2
48	CTO.PORTA RETEN 95	S950102					2
49	CTO.TAPON REGUL.COMPRESION 95	S950103					1
50	CTO.TAPON REGUL.EXTENCION 95	S950104					1
51	ALLEN 8X30 .CULATA.	T0308030					6
52	BRIDA INFERIOR MANILLAR	ST950402					2
53	CTO.SUSPENSION CROMADA TRIAL-98	BT25814000	BT27814000	BT25814000	BT25814000	BT25814000	1

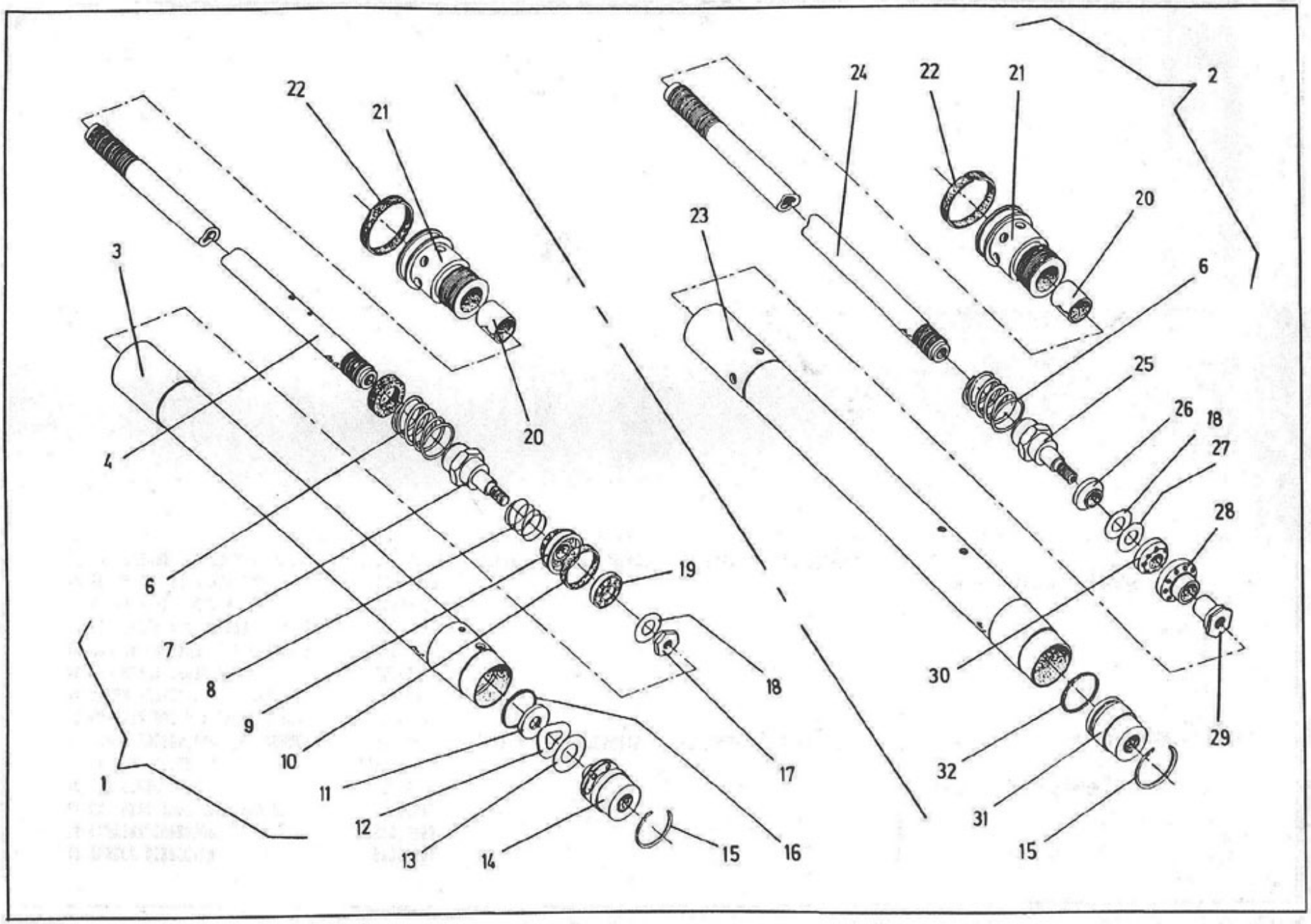
22
21
3
4
20
6
7
8
9
10
11
12
13
14
15
16
17
18
19
1
24
22
21
2
20
23
6
25
26
18
27
28
30
29
32
31
15

No.	DESCRIPCION	250 C.C.	270 C.C.	320 C.C.	125 C.C.	200 C.C.	C.
1	CTO.HIDRAULICO EXTENSION 95	S950100					1
2	CTO.HIDRAULICO COMPRESION 95	S950101					1
3	TUBO DEPOSITO HIDRA. EXT.	ST950404					1
4	EJE AMORTIGUADOR EXT.	ST950508					1
6	MUELLE TOPE RETORNO	ST950714					2
7	EJE PORTAVALVULAS EXT. D.2	ST950512					1
8	MUELLE CIERRE VALVULAS 14X15X1	ST950707					2
9	REGUL.ABERTURA HIDR. EXTEN.	ST950517					1
10	ARO NYLON GUIA P.F1-20.4X22.4X4	ST950205					1
11	ARAN.TAPON HIDRA.EXT.2.5	ST950710					1
12	ARAN.REGLAJE 013X20X0.1 ABOMB.	ST950709					1
13	ARAN. 010.2X20X0.2 REGLAJE	ST950708					1
14	TAPON HIDRA. EXTEN.	ST950521					1
15	CLIP TAPON HIDRAULICO	ST950711					2
16	JUNTA TORICA 20X1	ST950207					1
17	TORNILLO TOPE ARAND. EXTENSION	ST950519					1
18	ARANDELA REGLAJE 08,1X17X0.1	ST950704					2
19	VALVULA EXTENSION	ST950518					1
20	GLACIER 1215P10 PED.FRE-SUSP.	ST950210					2
21	TAPON TUBO HIDRAULICO	ST950510					2
22	ARO NYLON TAPON F1-29X33.3X5	ST950204					2
23	TUBO DEPOSITO HIDR.COMPRE.	ST950403					1
24	EJE AMORTIGUADOR COMP.	ST950509					1
25	EJE PORTAVALVULAS COMP.	ST950511					1
26	TOPE CIERRE VALVULA COMPR.	ST950513					1
27	ARANDELA REGLAJE 08,1X17X0.2 =ME256	ST950705					1
28	VALVU.PASO HIDR.COMPR.	ST950515					1
29	TUERCA FIJ. HIDRA. COMPR.	ST950516					1
30	VALVULA COMPR.	ST950514					1
31	TAPON HIDRA. COMPR.	ST950520					1
32	TORICA 1.78NB-18 77X1.78	ST950206					1

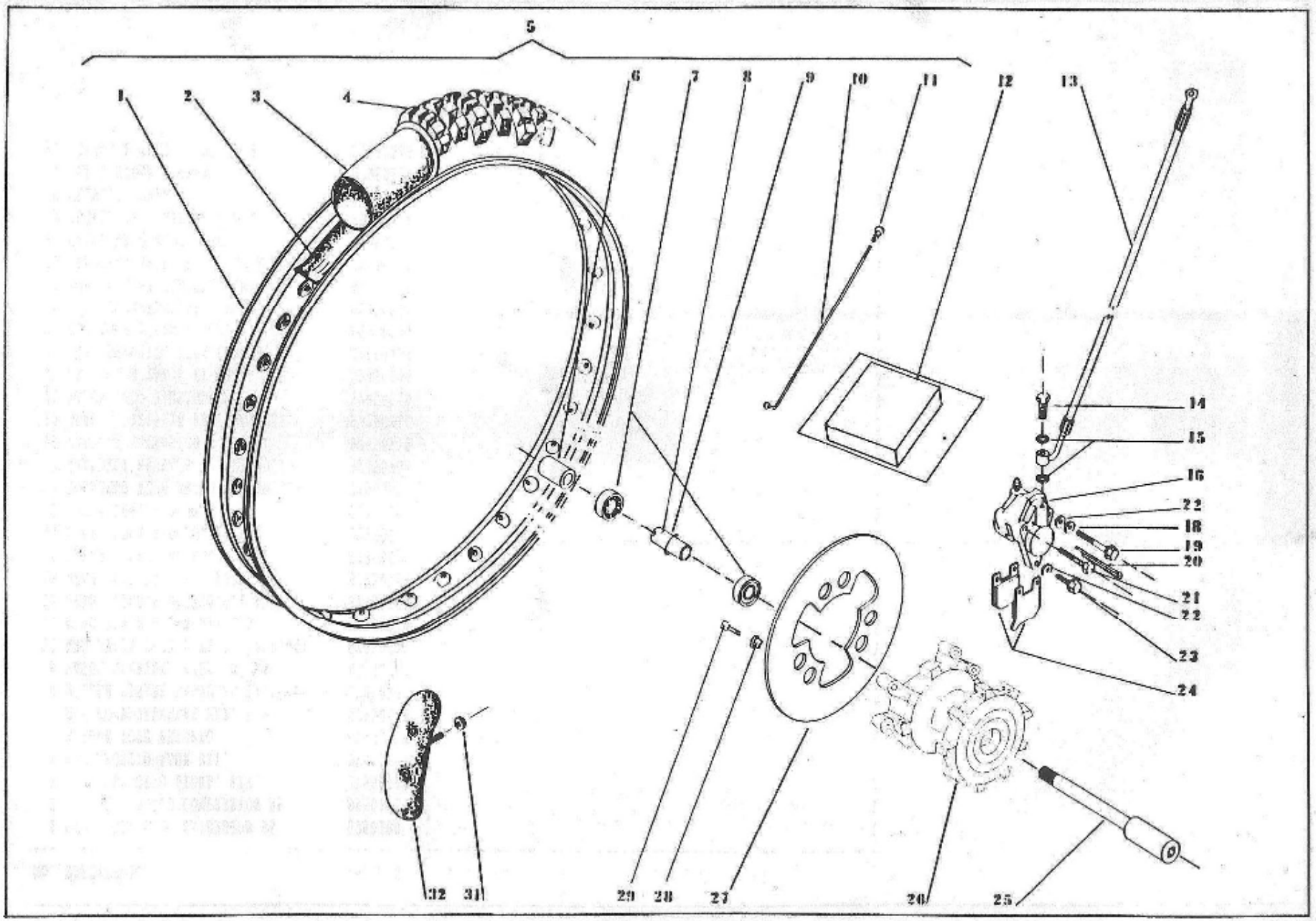
5
1
2
3
4
6
7
8
9
10
11
12
13
14
15
16
22
18
19
20
21
22
23
24
32
31
29
28
27
26
25

No.	DESCRIPCION	250 C.C.	270 C.C.	320 C.C.	125 C.C.	200 C.C.	C.
1	LLANTA DELANTERA TRIAL 97	BT27718006					1
2	GOMA PROTECTOR 2.75X21 NEUMATICO	N100000					1
3	CAMARA DELANTERA 2.75X21	N120000					1
4	CUBIERTA DELANTERA 2.75X21	N140000					1
5	CTO.RUEDA DELANTERA 97	BT27718000					1
6	DISTANCIADOR RUEDA DEL.97	BT27718018					1
7	COJINETE 6004 2RSR	C160001					2
8	CASQUILLO INT.BUJE DELANTERO	BT27718051					1
9	GOMA INT.BUJE RUEDA DELANTERA	BT27718053					1
10	RADIOS 247X3 RUEDA DEL.	BT27718009					36
11	TUERCA RADIOS 3mm. RUEDA DEL.DIA.6.	BT27718001					36
12	KIT PINZA TRAS. AJP	R260001					1
13	LATIGUILLO FRENO DELAN.NEGRO	BT27722002					1
14	TOR.LAT.BOMBA FRENO TRAS.= BE256220	R320000					1
15	ARANDELA COBRE 10X14X1	R330001					2
16	PINZA FRENO DELANTERA TRIAL	BT27722000					1
18	CASQUILLO CUBREDISCO	P220115					1
19	ALLEN 8X60 1/2 ROSCA	T0308060					1
20	CHAVETA SUJ.PASTILLA FRENO	R250000					2
21	EXAGONAL 8X40 (12.9)	T0108040					1
22	ARANDELA DE 8X16X1,5	T4008016					3
23	ALLEN 8X35 CUBREDISCO	T0308035					1
24	PASTILLA DE FRENO	R235000					2
25	EJE RUEDA DEL.	R550103					1
26	BUJE RUEDA DEL.TRIAL 97 *	BT27718007					1
27	DISCO FRENO DELANTERO 185	BT27722011					1
28	DISTANCIADOR FLOTANTE 18x15.2x6	BT27718019					6
29	EXAGONAL M8 CON ARAN.DISCO DELANTER	T0208007					6
31	TUERCA CON ARAN.M-8	T2208000					1
32	AGARRE CUBIERTA N1 =BE25618027	R120000					1

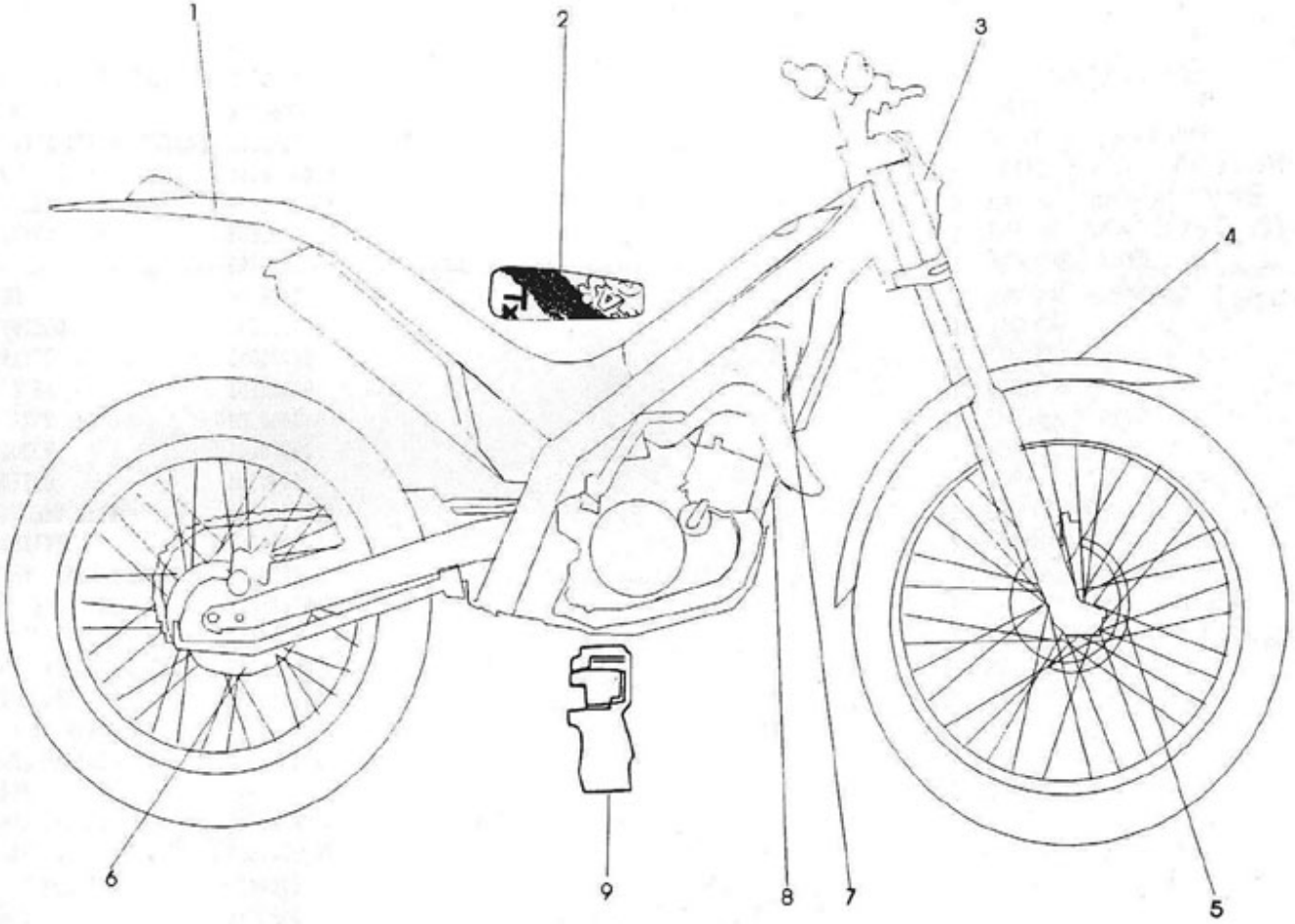
1
2
3
4
5
6
7
8
9

No.	DESCRIPCION	250 C.C.	270 C.C.	320 C.C.	125 C.C.	200 C.C.	C.
1	GUARDABARRO TRASERO TRIAL ROJO	BT27820007		BT32820007	BT20820007		1
2	SILLIN TRIAL 250-270-98	BT27810015		BT32810015	BT20810015		1
3	CTO.FARO 125-98	BT25820120	BT27820120	BT32820120	BT20820120	BT20820120	1
4	GUARDABARRO DEL.ROJO 250	P280006RO		BT32720006	P280006AM		1
5	PROTECTOR DISCO FRENO ROJO 250	P360104RO		BT32720045		P360104AM	1
6	PROTECTOR DISCO TRAS.	BT27728012					1
7	TAPA LATERAL DRCH.98	BT27820012		BT32820012	BT20820012		1
8	TAPA LATERAL IZD.98	BT27820013		BT32820013	BT20820013		1
9	PROTECTOR SUSPENSION 245	BT27820008					1

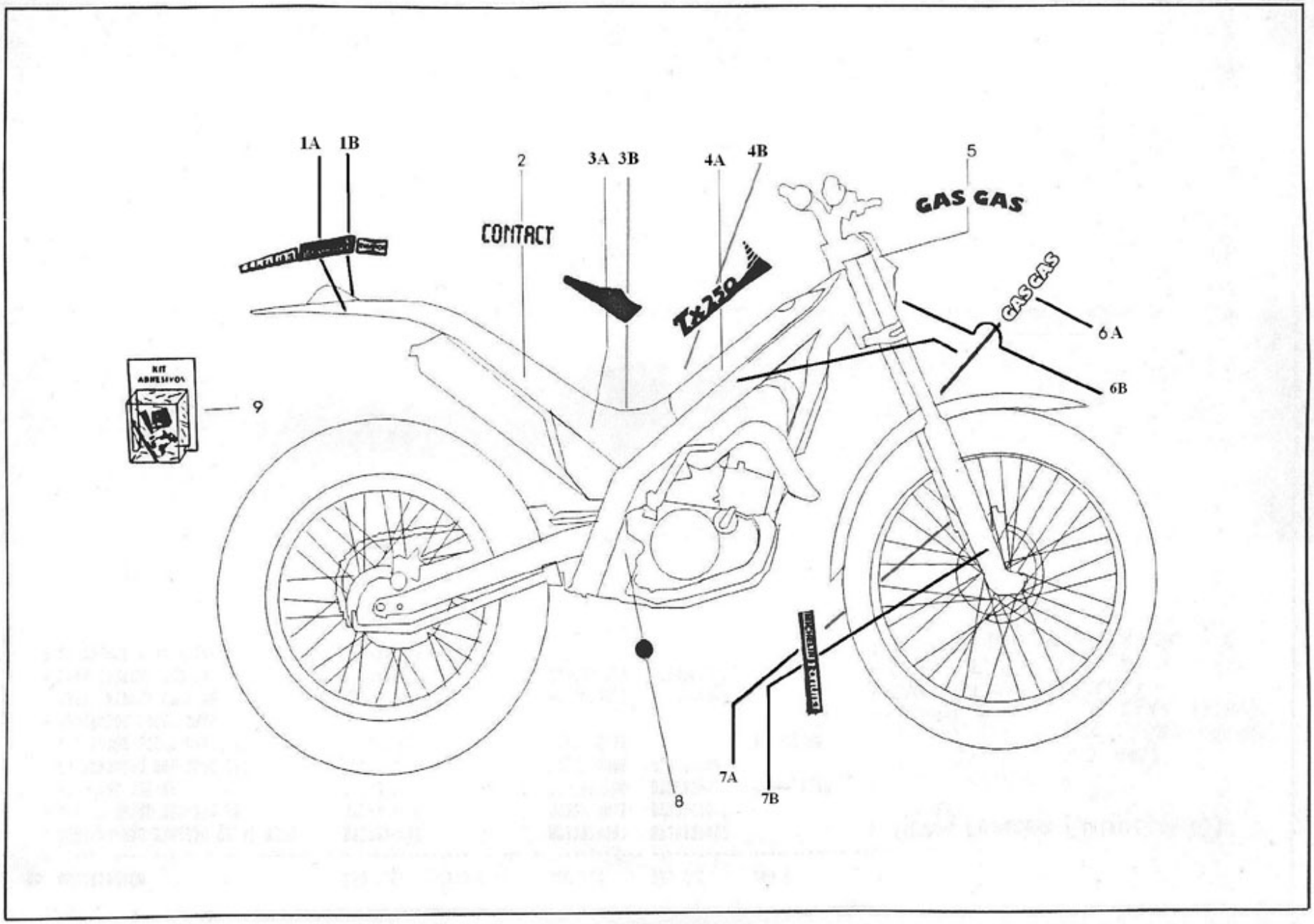
1A
1B
2
3A
3B
4A
4B
5
CONTACT
GAS GAS
GAS GAS
6A
6B
9
7A
7B
8

No.	DESCRIPCION	250 C.C.	270 C.C.	320 C.C.	125 C.C.	200 C.C.	C.
1A	ADHE.FORTUNA-QUAKER DRCH. CARRERAS	BT27738201					1
1B	ADHE.FORTUNA-QUAKER IZQ. CARRERAS	BT27738202					1
2	adh.contact guard.lateral	BT27838032MP					1
4	ADH.DEPOSITO 250 DRCH.	BT25838020	BT27838020	BT32838020	BT12838020	BT20838020	1
3A	adhesivo.fibra carbono guard.drch.	BT27838030MP					1
3B	adhesivo fibra carbono guar.izq.	BT27838031MP					1
4A	ADH.DEPOSITO IZQ.	BT25838021	BT27838021	BT32838021	BT12838021	BT20838021	1
5	mat.prima faro letras negras	BT27838001MP					1
6A	ADH.GAS GAS CHASIS TEXTO NEGRO LINE	BT27838010			BT20838010	BT20838010	1
7A	ADHE.HORQUILLA IZQ.PUBLICIDAD	BT27738042					1
7B	ADH.HORQUILLA DRCH.PUBLICIDAD	BT27738043					1
8	TAPON BASCULANTE 8927 =BE25636001	G230000					2
9	CTO.ADHESIVOS 250-98	BT25838000	BT27838000		BT12838000	BT20838000	1
6B	ADH.GAS GAS CHASIS TEXTO NEGRO LINE	BT27838011					1
4B	ADH.DEPOSITO DER.	BT25838020	BT27838020	BT32838020	BT12838020	BT20838020	1

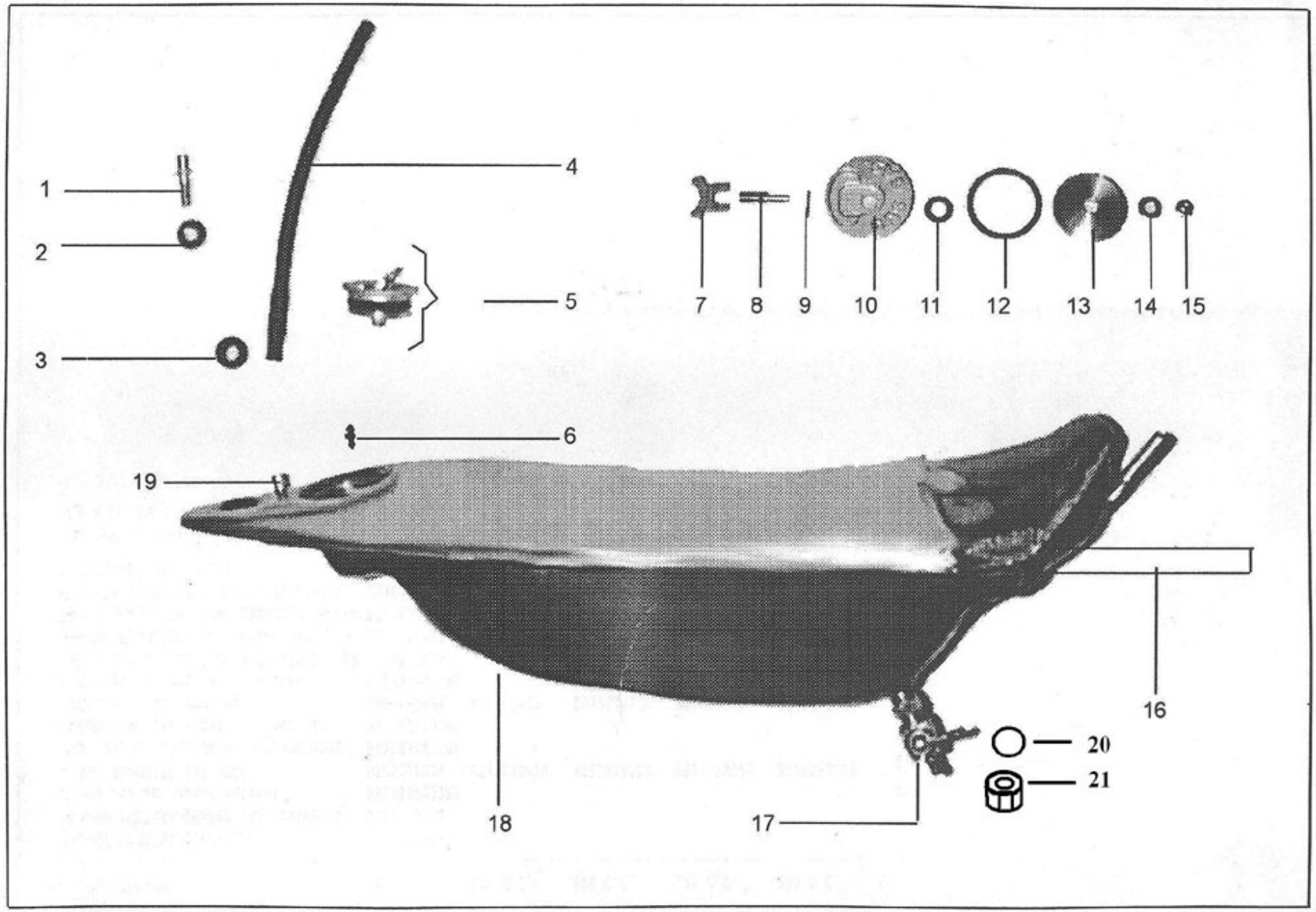
1
2
3
4
5
6
7
8
9
10
11
12
13
14
15
16
17
18
19
20
21

No.	DESCRIPCION	250 C.C.	270 C.C.	320 C.C.	125 C.C.	200 C.C.	C.
1	DESVAPORIZADOR DEPOSITO GASOLINA	BT27810083					1
2	ARANDELA 6X18X1.5 (DIN 9021)	T4006018					1
3	GOMA PROT. LATIGUILLO 4947	G200000					1
4	TUBO DESVAP.DEPOSITO 17 cm.=G470000	BT27810018					1
5	CTO.TAPON GASOLINA	BT27820010					1
6	CASQ.GUIA DEPOSITO =BE25610007	B560040					1
7	CIERRE TAPON DEPOSITO	BT27810088					1
8	EJE TAPON DEPOSITO	BT27710092					1
9	PASADOR CIERRE TAPON	BT27710094					1
10	PARTE EXT.TAPON DEPOSITO	BT27810089					1
11	ARANDELA ANTIDESGASTE CERRADURA	BT27710095					1
12	TORICA CIERRE 29X3	BT27810097					1
13	APRETADOR TORICA TAPON DEPOSITO	BT27710090					1
14	ARANDELA 6X18X1.5 (DIN 9021)	T4006018					1
15	TORICA EJE TAPON 5X1	BT27810098					1
16	JUNTA DEPOSITO CHASIS 40 X 10	BT27838018					1
17	GRIFO GASOLINA C/90	BT27810031					1
18	DEPOSITO TRIAL-98	BT27810024					1
19	TORNILLO DESV.SUJ.DEPOSITO	BT27810086					1
20	**JUNTA (GOMA)**	**BT27910131**					
21	**TUERCA ESP. GRIFO GAS.**	**BT27910132**					

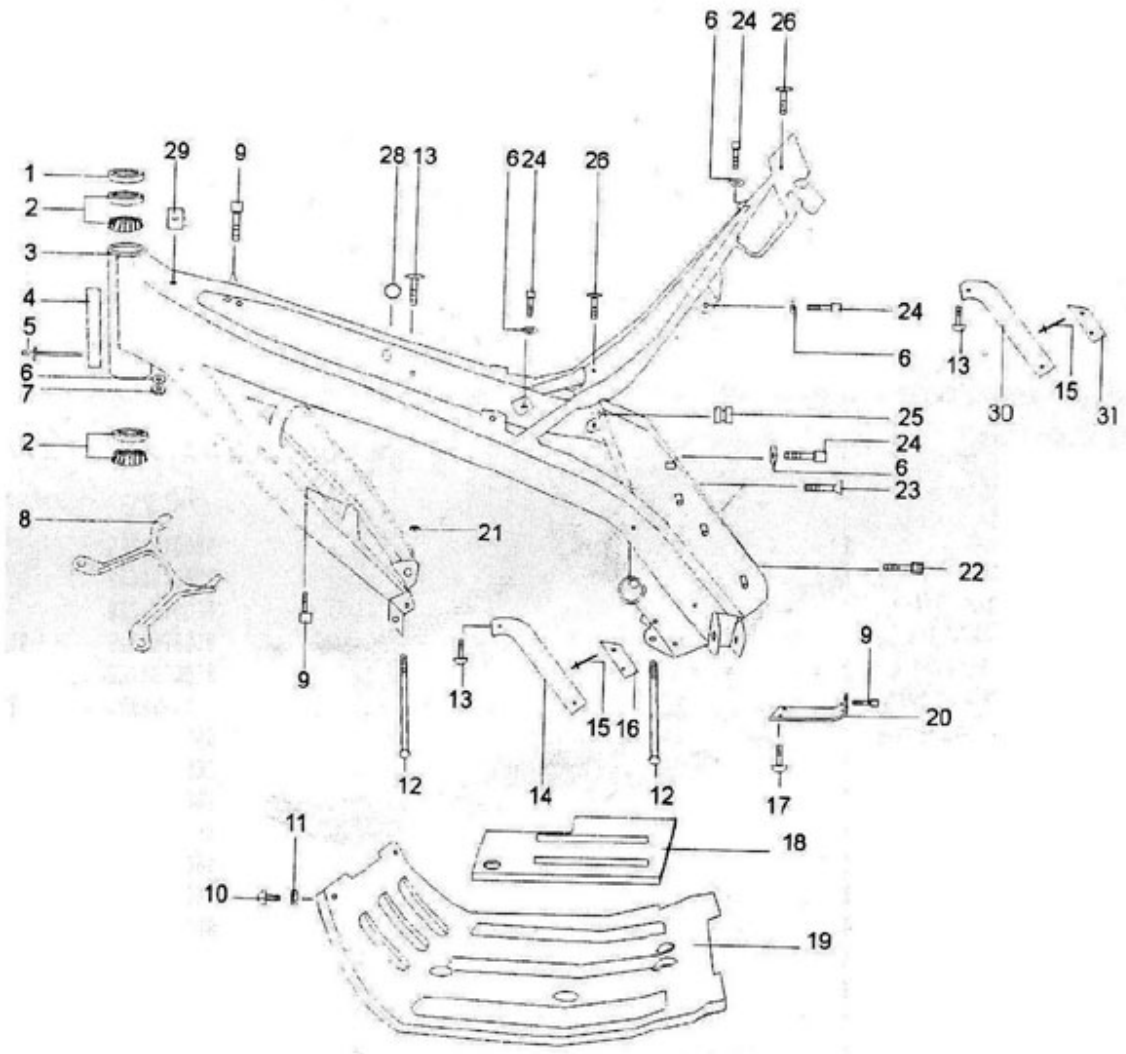
6
24
26
1
2
3
4
5
6
7
2
8
29
9
28
13
6
24
26
24
6
13
30
15
31
25
24
6
23
21
22
9
13
15
16
9
20
12
14
12
17
11
18
10
19

No.	DESCRIPCION	250 C.C.	270 C.C.	320 C.C.	125 C.C.	200 C.C.	C.
1	GUARDAPOLVO COJINETES DIRECCION C40	BT27710026					1
2	COJINETE DIRECCION 30203	C140100					2
3	CHASIS TRIAL 98	BT27810000					1
4	PLACA IDENTIFICACIO 270-97	BT27710060					1
5	REMACHE 3X6 ALU.-09101638- PLACA ID	T4503260					2
6	ARANDELA PLANA 6X12X1.5 (DIN 125)	T4006012					5
7	TUERCA CON ARAN.M-6 (DIN 6923) ESTR	T2206000					1
8	TIRANTE CILINDRO 97	BT27710050					1
9	ALLEN 6X12	T0306012					4
10	ULS 8X20 PLAT,PROT,	T0508020					4
11	TUERCA AUTOBL. M-5	T2105001					2
12	ALLEN MOTOR 3/8 UNF X 105	T0309105					2
13	TORN. CHAPA 4,2X16 -13404216 CAB.GR	T259350					2
14	PROT.LATERAL CHASIS PEQUEÑO IZD.	BT27720031					1
15	REMACHE 3X10 ALUM.LACADO NEGRO TRIA	T4503280					4
16	PROTEC.LATERAL CHASIS IZD.	BT27720036					1
17	ULS 8X12 8.8 SOP.CAV.	T0508012					2
18	GOMA PROTECTOR MOTOR	G140000					1
19	PLACA PROTECCION MOTOR	BT27810005					1
20	TIRANTE CHASIS CARTER	B100170					1
21	TUERCA 3/8 UNF TOR.MOTOR	T2509000					1
22	EXAGONAL 8X30 (DIN 933) 8.8 PINZA F	T0108030					1
23	ALLEN CON. 6X40	T0406040					2
24	ALLEN 6X14	T0306014					4
25	GOMA PROT. LATIGUILLO 4947	G200000					1
28	GOMA CABALLETE 5928	G410000					1
29	TUERCA REMACHABLE M-6 917-76	T2706000					1
30	PROT.LATERAL CHASIS PEQUEÑO DRCH.	BT27720030					1
31	PROTE. LATERAL CHASIS DRCHO.	BT27720035					1
26	TORN. PHILIPS 6X18 PAVONADO	T0706018					2

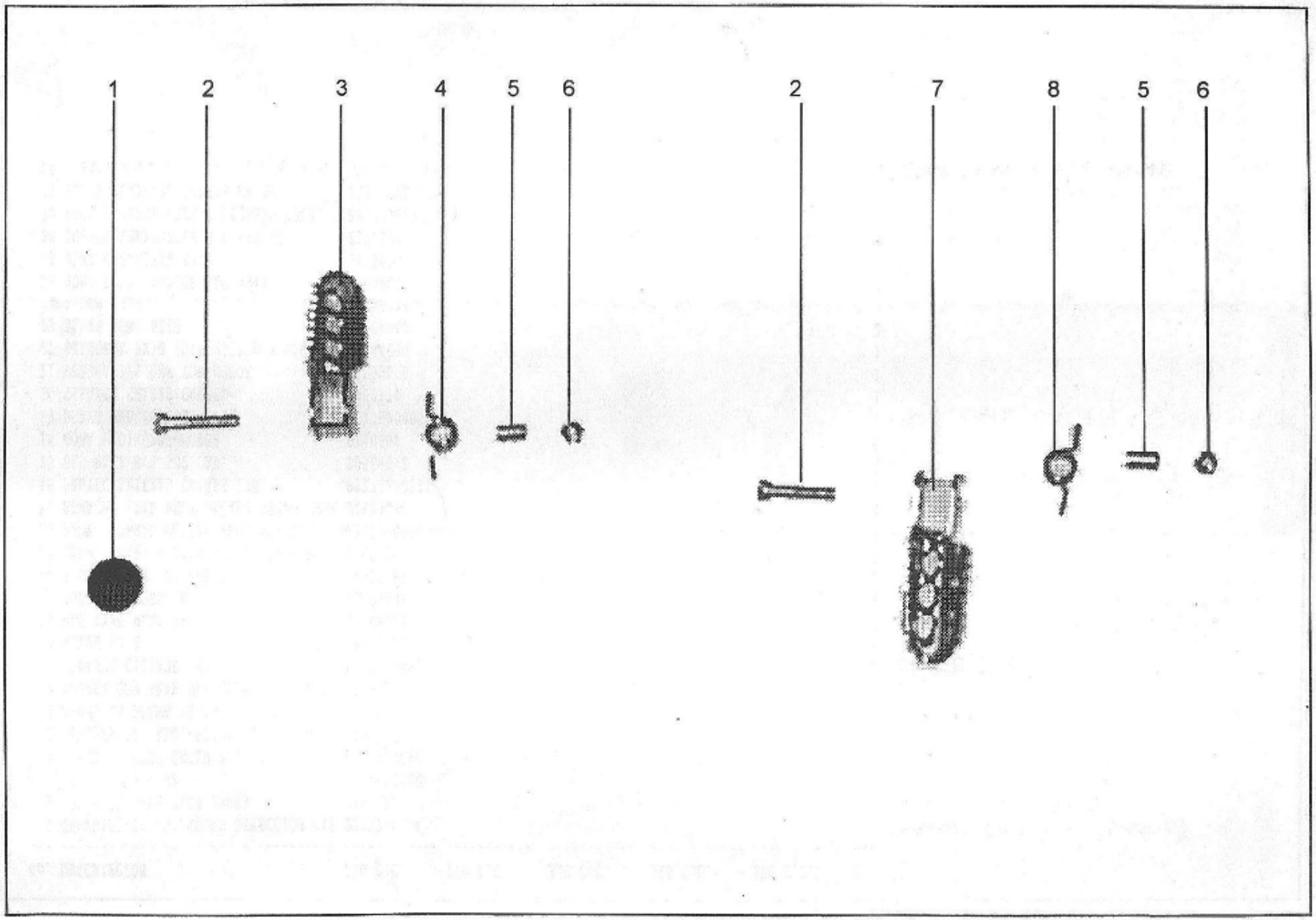
1
2
3
4
5
6
2
7
8
5
6

No.	DESCRIPCION	250 C.C.	270 C.C.	320 C.C.	125 C.C.	200 C.C.	C.
1	TAPON BASCULANTE 8927 =BE25636001	G230000					2
2	ALLEN 8X45 .ESTRIB.	T0308045					2
3	ESTRIBO IZQUIERDO	BT27810003					1
4	MUELLE ESTRIBO IZDA.	M100004					1
5	CASQUILLO ESTRIBO	B160002					2
6	TUERCA AUTOBL. M-8 BAJA (DIN 985)	T2108001					2
7	ESTRIBO DERECHO	BT27810002					1
8	MUELLE ESTRIBO DCHA.	M100003					1

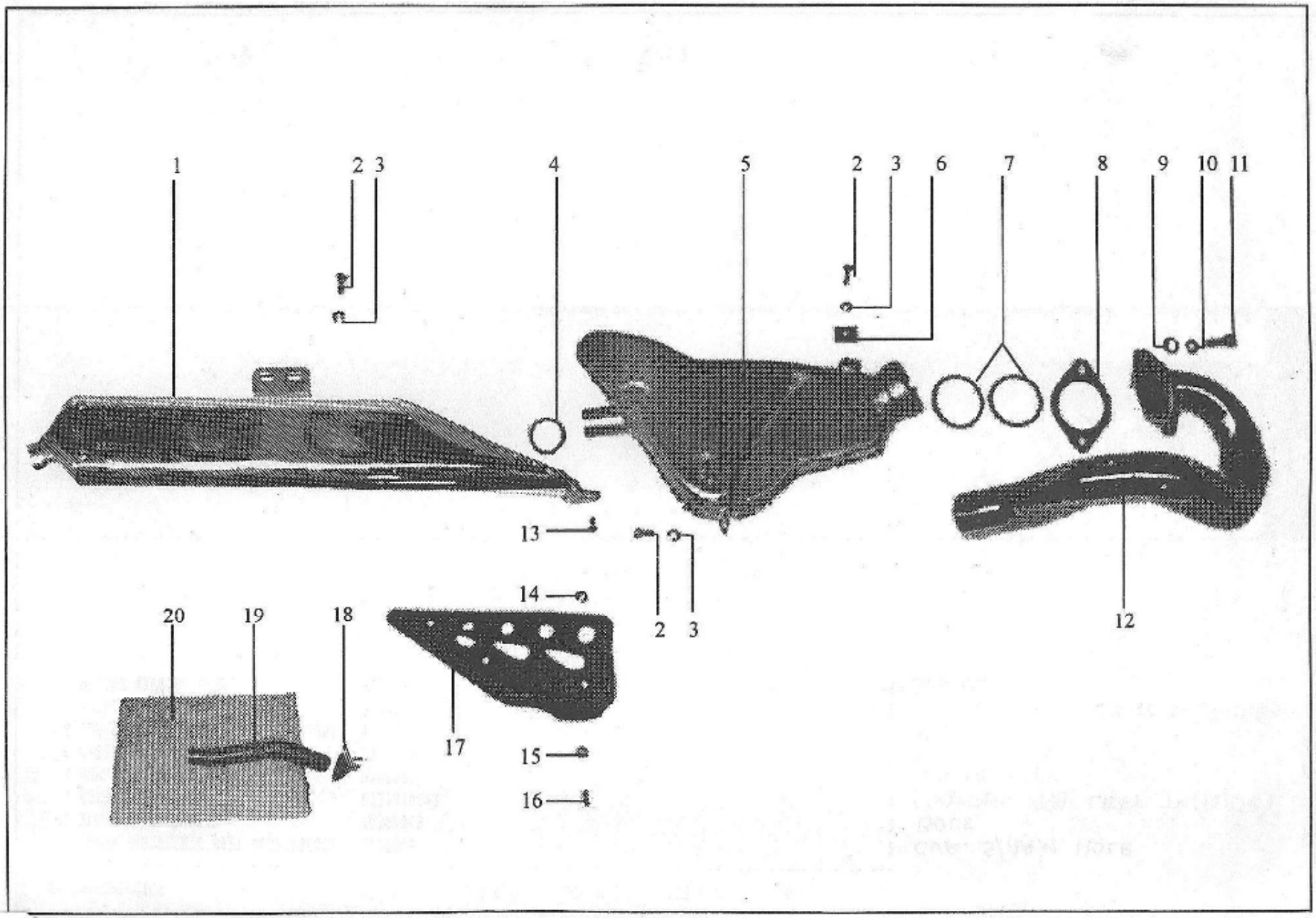
1
2 3
4
5
2 3 6
7
8
9 10 11
12
13
14
2 3
15
16
17
18
19
20

No.	DESCRIPCION	250 C.C.	270 C.C.	320 C.C.	125 C.C.	200 C.C.	C.
1	SILENCIOSO FINAL 250-270-98	BT27826002	BT27826002	BT32726002	BT12826002	BT12826002	1
2	EXAGONAL CON ARAN. 6X12 FILT.ESC.	T0206012					4
3	TUERCA NUT 956 ENJAULADA M-6 021282	T2606000					4
4	TORICA SILEN.FINAL DNB 27.5X3 =BB25	C280002					1
5	SILENCIOSO INTERMEDIO 270-98	BT27826020	BT27826020	BT32726020	BT27826020	BT27826020	1
6	TUERCA NUT 956 ENJAULADA M-6 021282	T2606000					1
7	TORICA SILEN.INT. 44.05X3.53	C290000					2
8	JUNTA TUBO DE ESCAPE	B600001					1
9	ARANDELA PLANA 8X17X1.5 (DIN 125)	T4008017					2
10	ARANDELA GLOB.R 8X14X2 (DIN 127) ES	T4008314					2
11	ALLEN 6X14	T0306014					2
12	TUBO ESCAPE 250-270-98	BT27826001	BT27826001	BT27826001	BT20826001	BT20826001	1
13	ULS 5X10 (DOR.)PRO.DIS,COR,TAP.EMB.	T0505010					1
14	TUERCA AUTOBL. M-5	T2105001					2
15	TUERCA M-5 PROTECTOR ESCAPE	T2005000					2
16	ULS 5X10 (DOR.)PRO.DIS,COR,TAP.EMB.	T0505010					3
17	PROTECTOR ESCAPE	P360351					1
18	CAZOLETA FINAL SILENCIOSO 98	B600321					1
19	TUBO INTER.SILEN.250-96 350-95	B600320					1
20	FIBRA SILENCIOSO MOD.95	B600315					1

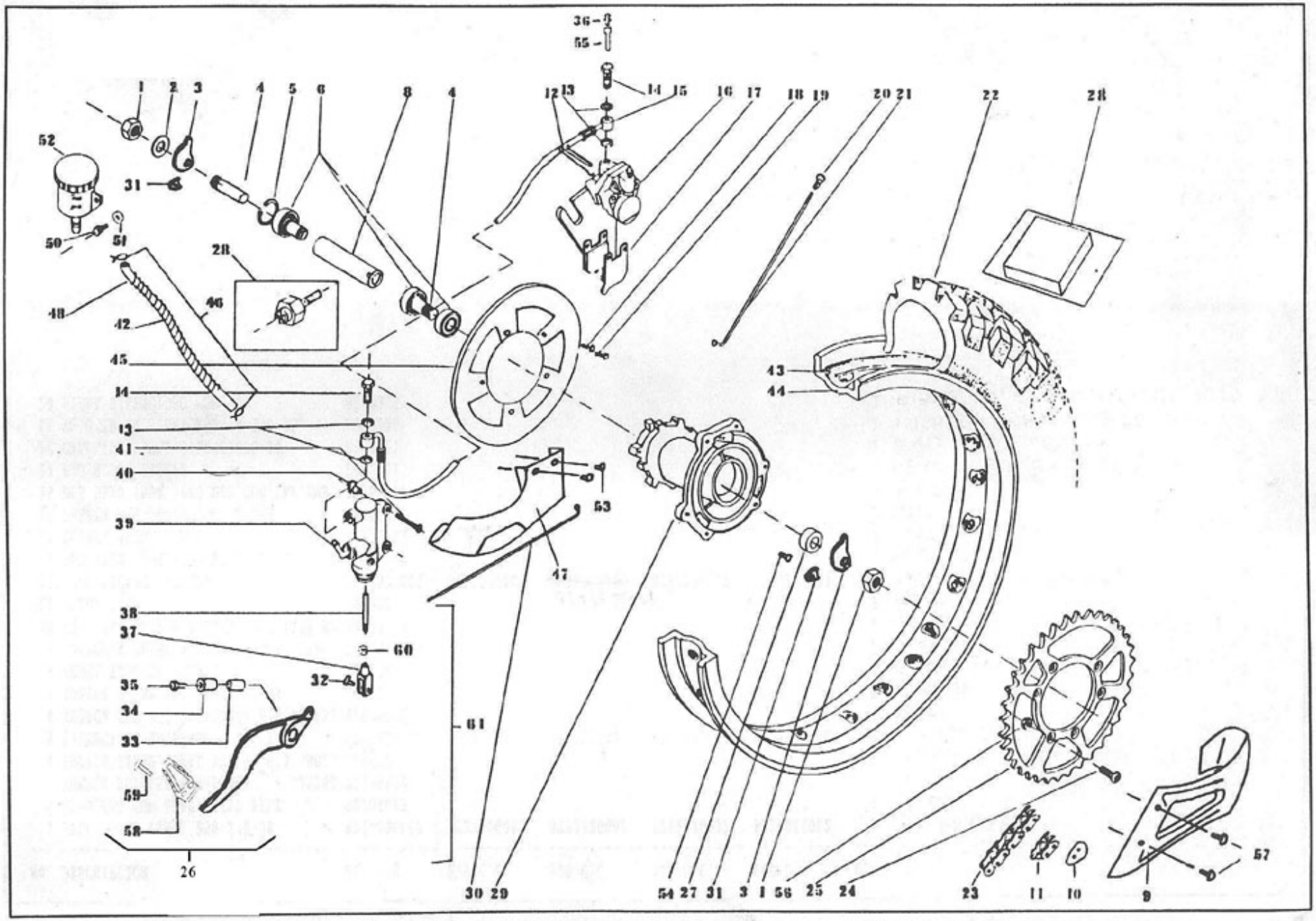
36
55
1
2
3
4
5
6
8
4
12
13
14
15
16
17
18
19
20
21
22
28
52
31
50
51
28
48
46
42
45
14
13
41
40
39
53
47
38
37
60
35
32
34
33
61
59
58
26
30
29
54
27
31
3
1
56
25
24
23
11
10
9
57

No.	DESCRIPCION	250 C.C.	270 C.C.	320 C.C.	125 C.C.	200 C.C.	C.
1	TUERCA EJE RUEDA TRAS.	R640001					2
2	ARANDELA EJE TRAS 17X30X1.5 DIN 137	T4017030					2
3	EXCENTRICA TRASERA	R620001					2
4	EJE RUEDA TRAS.	R590003					1
5	CLIP SEEGER INT. CUBO	R500009					1
6	COJINETE CUBO	C160001					3
8	CASQUILLO INT.BUJE TRASERO	BT27718052					1
9	PROTECTOR CORONA TRAS.	P360301					1
10	ENGANCHE CADENA	B500000					1
11	MEDIA MALLA ENGANCHE CADENA TRIAL	B500001					1
12	CHAVETA SUJ.PASTILLA FRENO	R250000					2
13	ARANDELA COBRE 10X14X1	R330001					4
14	TOR.LAT.BOMBA FRENO TRAS.= BB256220	R320000					1
15	LATIGUILLO FRENO TRASERO NEGRO	R310104					1
16	PINZA SOPORTE FRENO TRAS.97	BT27722001					1
17	PASTILLA DE FRENO	R235000					2
18	ALLEN 6x18 DIN 6912 DISCO TRAS.	T0316018					4
19	ULS 6X16 PL.PRIM,GUAR,FIL.	T0506016					1
20	TUERCA RADIOS 3.5mm. RUEDA TRAS.DIA	BT27718016					36
21	RADIOS 215X3.5 RUEDA TRAS.	BT27718014					18
22	CUBIERTA TRASERA 400X18 TBLS	N200100					1
23	CADENA 100 PASOS	B480101					1
24	ULS 8X20 PLAT,PROT,	T0508020					6
25	CORONA Z-41 250	R840001	R840001	R840000	R840002	R840002	1
26	PEDAL FRENO TRIAL 98 *	BT27822016					1
27	DISTANCIADOR RUEDA TRAS.97	BT27718021					1
28	KIT PINZA TRAS. AJP	R260001					1
29	BUJE RUEDA TRAS.TRIAL 97 *	BT27718027					1
30	RADIOS 208X3.5 RUEDA TRAS.	BT27718015					18
31	TOPE EXCENTRICA S/BASCULANTE	R620050					1
32	PASADOR VARILLA FRENO	R720000					1
33	GLACIER PEDAL FRENO 1215PD10	C200101					1
34	CASQUILLO PULS.FRENO TRAS.	R830002					1
35	EXAGONAL 8X30 (DIN 933) 8.8 PINZA F	T0108030					1
36	TAPON SANGRADOR PINZA AJP	R234001					1

No.	DESCRIPCION	250 C.C.	270 C.C.	320 C.C.	125 C.C.	200 C.C.	C.
37	HORQUILLA VARILLA FRENO	R715100					1
38	VARILLA FRENO TRASERA	R710103					1
39	BOMBA FRENO TRAS.10.4776.10	R350100					1
40	CASQ.SUJ. BOMBA TRAS. =BE25622024	R350110					2
41	ALLEN CON. 6X40	T0406040					2
42	MUELLE DESVAPORIZADOR	M150000					1
43	FLAP LLANTA TRAS.	R500115					1
44	LLANTA TRASERA TRIAL 97	BT27718011					1
45	DISCO FRENO TRASERO 150	BT27722012					1
46	ABRAZADERA MUELLE DE 9	L200036					2
47	PROTECTOR DISCO TRAS.	BT27728012					1
48	TUBO DESVAPOR.CARTER (26cm.)=BT2771	L200030					1
50	ULS 6X12 TOPE FREN,PRO.FIL,	T0506012					1
51	ARANDELA PLANA 6X12X1.5 (DIN 125)	T4006012					1
52	DEPOSITO LIQUIDO FRENOS =BE25610016	L200010					1
53	ULS 5X12 FARO,BOM.AG.	T0505012					4
54	ALLEN M-8X10 (8.8) (DIN 912)	T0308010	T0308010				1
55	SANGRADOR PINZA FRENO DEL.	R234000	M01060000				1
56	TUERCA AUTOBL. M-8 BAJA (DIN 985)	T2108001					1
57	ULS 5X10 (DOR.)PRO.DIS,COR,TAP.BMB.	T0505010					6
58	PUNTERA PEDAL FRENO TRIAL 98	BT27822017					1
59	REMACHE HIERRO 5X18 DIN 660 ZINCADO	T4505017					2
60	TUERCA M-6 BAJA DIN 936	T2006001					1
							1

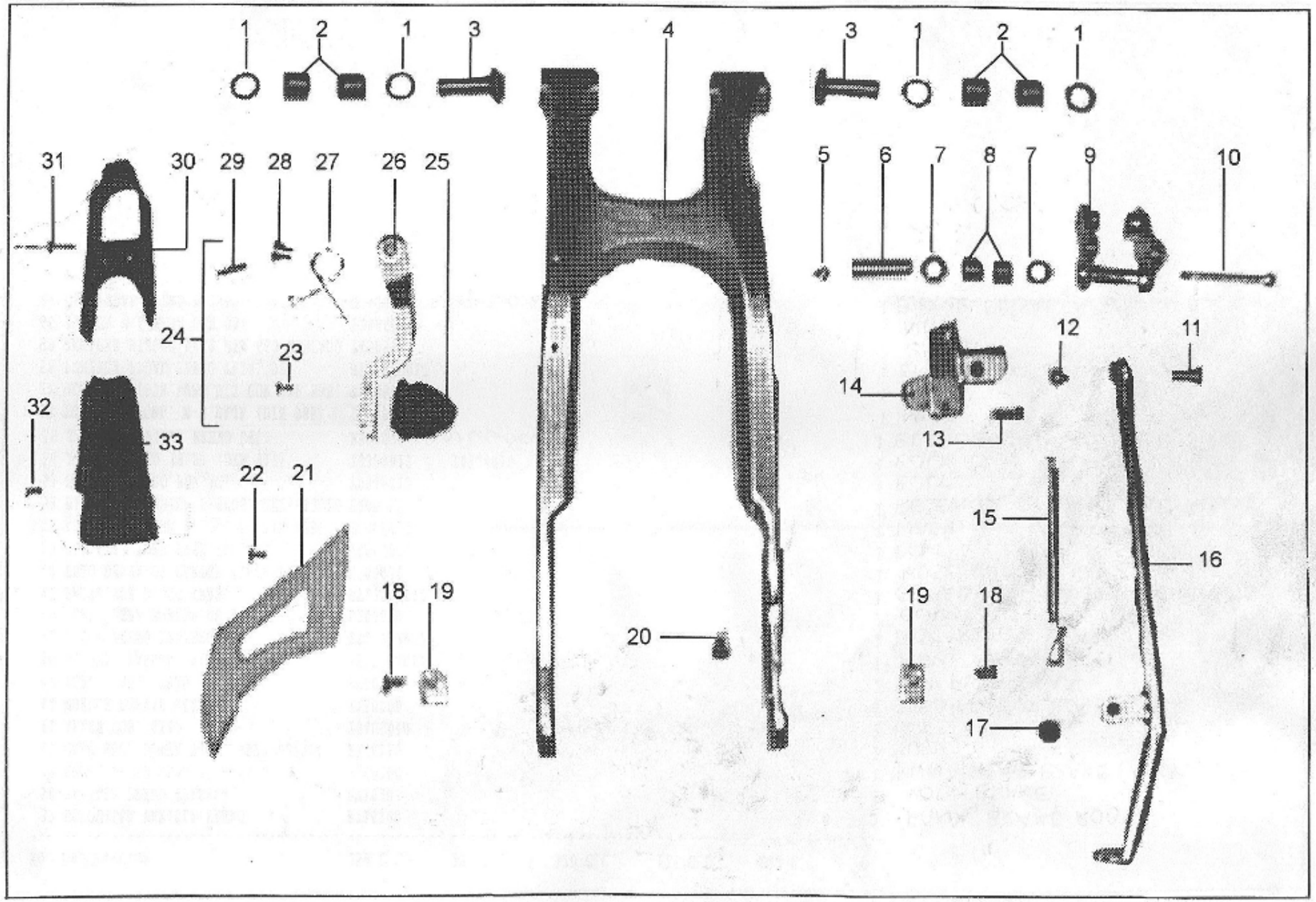
1
2
1
3
4
3
1
2
1
31
30
29
28
27
26
25
5
6
7
8
7
9
10
24
23
12
11
14
32
33
13
22
21
15
16
18
19
20
19
18
17

No.	DESCRIPCION	250 C.C.	270 C.C.	320 C.C.	125 C.C.	200 C.C.	C.
1	RETEN 20-26-4 870 N BASC.	C220001					4
2	COJINETE AGUJAS HK2020	C100001					4
3	CASQUILLO BASCULANTE	B220002					2
4	BASCULANTE	B200102					1
5	TUERCA EJE BASCULANTE =ME25612005	B260001					2
6	CASQUILLO MOV.50X15X8	T700001					1
7	RETEN 15-21-3-8170N BASC.BAL.	C230000					2
8	COJINETE AGUJAS HK1516	C110001					2
9	BALANCIN SUSPENSION	B340100					1
10	ALLEN 8X75 .ESP UMBR. BALAN.	T0308075					2
11	CASQUILLO GUIA CABALLETE TRIAL	BT27712011					1
12	ALLEN 8x16	T0308016					1
13	ALLEN 6X16 UFK CAVLL.BASC.	T0316016					1
14	SOP.CABALLETE 97	BT27712023					1
15	MUELLE CABALLETE	M120000					1
16	CABALLETE TRIAL 97	BT27712010					1
17	GOMA CABALLETE 5928	G410000					1
18	ALLEN M-8X10 (8.8) (DIN 912)	T0308010					2
19	TOPE EXCENTRICA S/BASCULANTE	R620050		R620051			2
20	ALLEN M-8X10 (8.8) (DIN 912)	T0308010					2
21	PROTECTOR CORONA TRAS.	P360301					1
22	ULS 5X10 (DOR.)PRO.DIS,COR,TAP.EMB.	T0505010					6
24	CTO. TENSOR CADENA	B520101					1
25	GOMA TENSOR CADENA	G180010					1
26	BRAZO TENSOR CADENA	B520102					1
27	MUELLE TENSOR CADENA	M122000					1
28	CASQUILLO TENSOR CADENA	B560000					1
29	ALLEN CON.8X30 TENS.CAD.	T0408030					1
30	PATIN CADENA	G180002					1
31	REMACHE CAB.GRAN.14X4.8X21 PATIN 12	T4505016					1
32	TORN.ROSCA CHAPA PHILIPS 4X38 DIN 7	T0604038					2
33	CUBRECADENAS 97	BT27728011					1

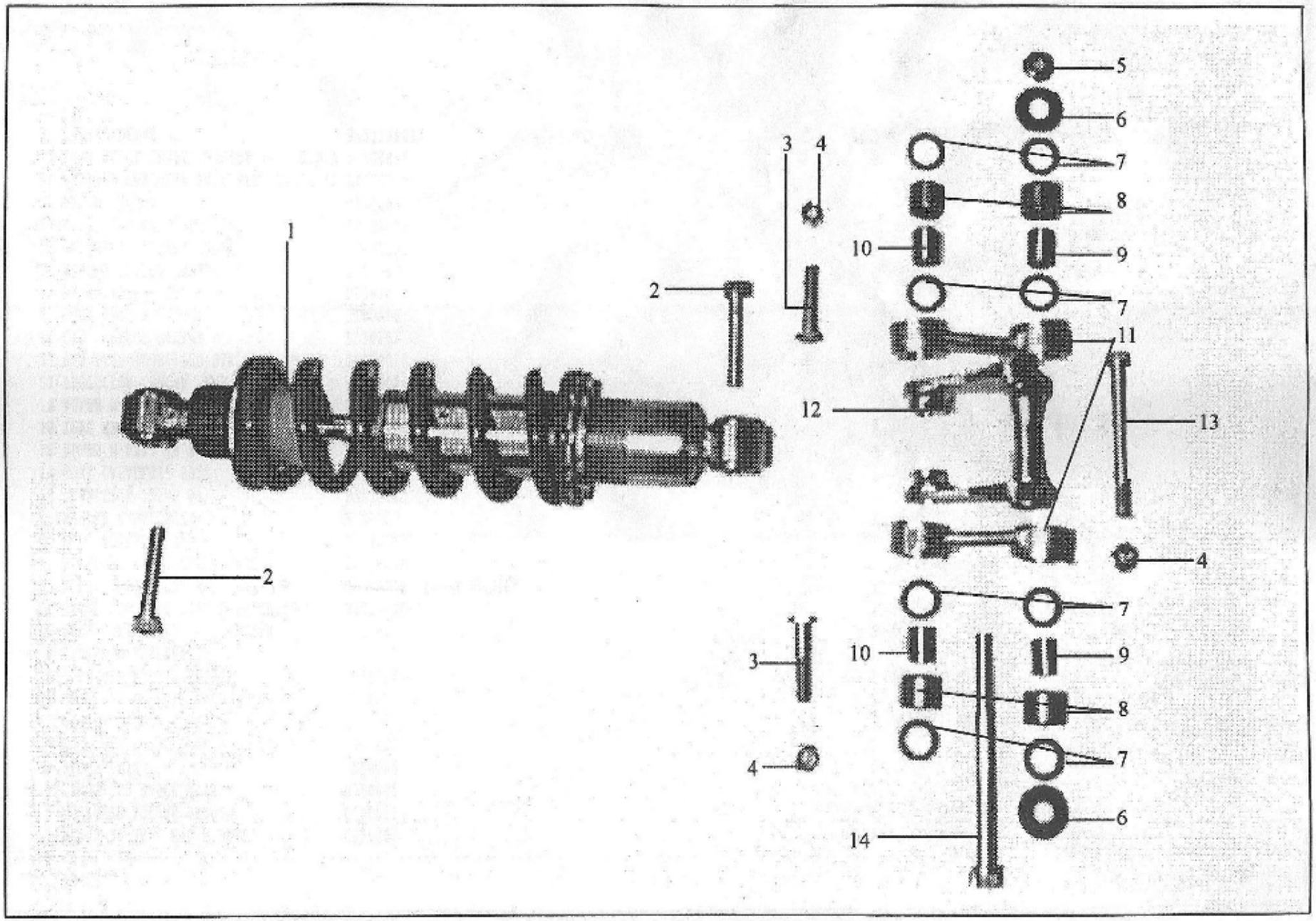
1
2
2
3
4
3
4
5
6
7
8
10
9
7
11
12
13
4
7
10
9
3
8
4
7
6
14

No.	DESCRIPCION	250 C.C.	270 C.C.	320 C.C.	125 C.C.	200 C.C.	C.
1	AMORTIGUADOR MUELLE ROJO	BT27714004					1
2	ALLEN 10X45 (12.9)	T0310045					2
3	EXAGONAL ESPECIAL 8*35	T0118035					2
4	TUERCA AUTOBL.M-8 ALTA (DIN 982)	T2108002					2
5	TUERCA AUTOBL. M-10 (DIN 985) CLASE	T2110001					1
6	ARANDELA REGLAJE 10.5X26X0.5	T4001026					2
7	RETEN 15X21X2	C230001					8
8	COJINETE AGUJAS DL1516	BT27714009					4
9	CASQUILLO SUSP.DIAM.10 97	BT27712005					2
10	CASQUILLO SUSP.DIAM.8 TRIAL 97	BT27712014					2
11	BIELETA 97	BT27714008					2
12	BALANCIN SUSPENSION	B340100					1
13	ALLEN 8X75 .ESP UMBR. BALAN.	T0308075					1
14	ALLEN 10X110 (12.9)	T0310110					1

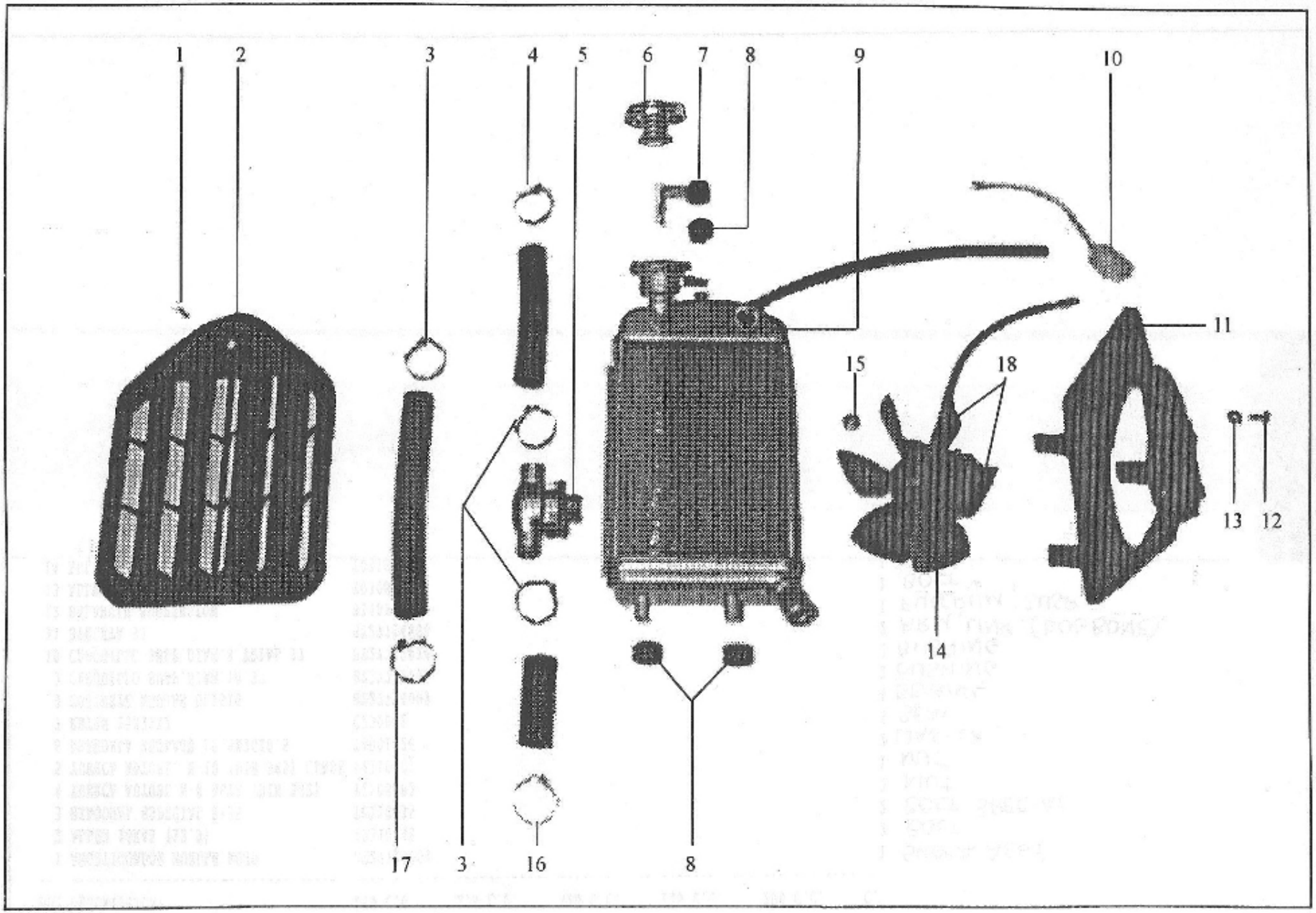
1
2
3
4
5
6
7
8
9
10
11
12
13
14
15
16
17
18

No.	DESCRIPCION	250 C.C.	270 C.C.	320 C.C.	125 C.C.	200 C.C.	C.
1	ULS 6X12 TOPE FREN,PRO.FIL,	T0506012					1
2	REJILLA RADIADOR	BT27820001					1
3	ABRAZ.COBRA-23	L200041					3
4	ABRAZ.COBRA-21	L200046					1
5	SOPORTE TERMO-CONTACTO	L200057					1
6	TAPON RADIADOR MOD.94	L200110					1
7	SOPORTE RADIADOR 97	BT27732015					1
8	GOMAS RADIADOR A CHASIS =BB25632003	G220000					3
9	RADIADOR 95 REF.45194	L200102					1
10	INSTAL.VENTILADOR PE40053G00	L300006					1
11	PROTECTOR VENTILADOR 96	L300011					1
12	EXAGONAL 4*16 (DIN 933)	T0104016					3
13	ARANDELA PLANA 4X12X1 (DIN 9021)	T4004012					3
14	ASPA VENTILADOR SUELTA	L300002					1
15	CASQUILLO VENTILADOR 96	L300016					2
16	ABRAZ.COBRA-21	L200046					1
17	ABRAZ.COBRA-19	L200043					1
18	VENTILADOR D-120	L300001					1

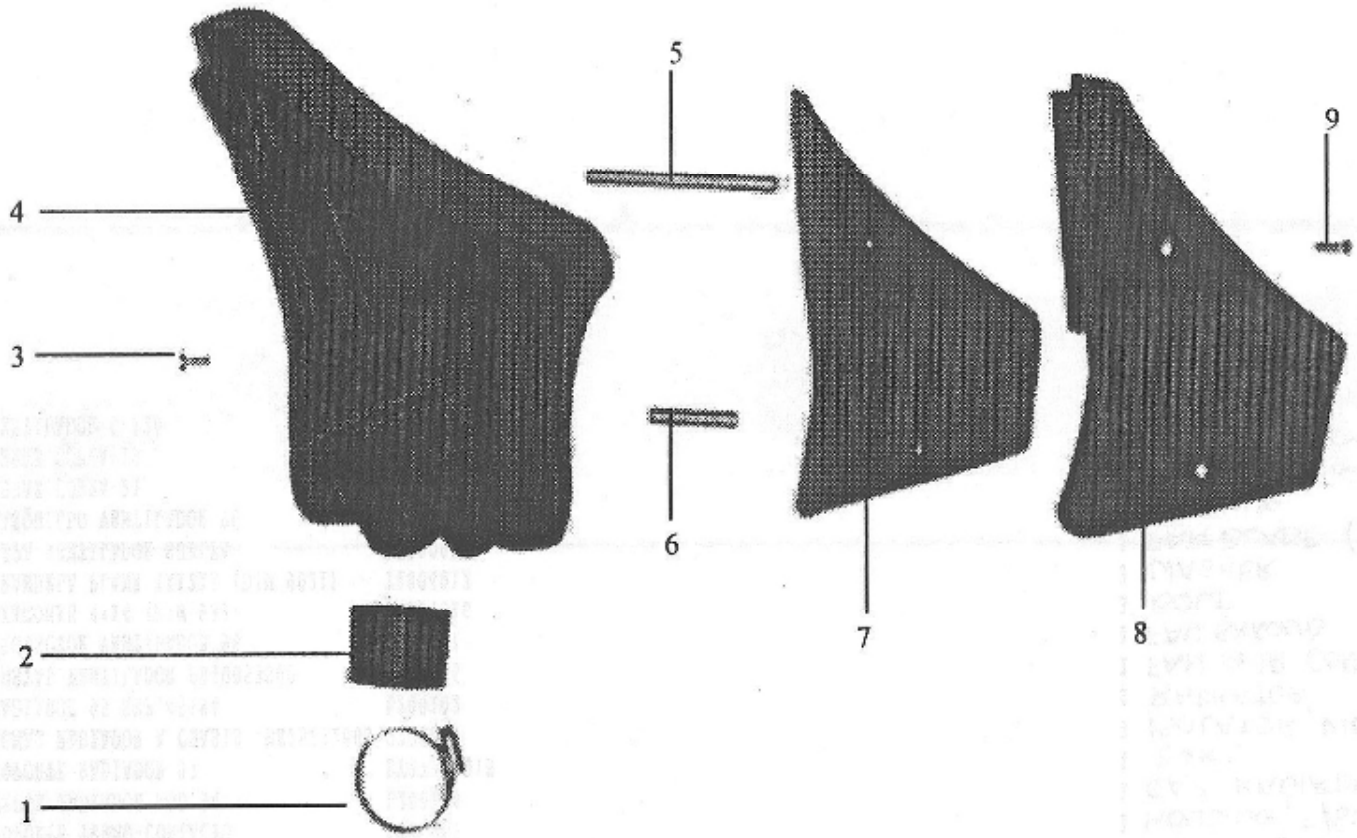
1
2
3
4
5
6
7
8
9

No.	DESCRIPCION	250 C.C.	270 C.C.	320 C.C.	125 C.C.	200 C.C.	C.
1	ABRAZ.CARBU.25-40 /9 W2	B640001					2
2	TUBERA CAJA FILTRO 97	BT27736010					1
3	TORNILLO PHILIPS 6x15	T0706015					2
4	CAJA FILTRO 97	BT27728001					1
5	DISTANC.FILTRO AIRE LARGO	BT27728005					1
6	DISTANC.FILTRO AIRE CORTO	BT27728004					1
7	FILTRO AIRE-97 158055	BT27728000					1
8	TAPA CAJA FILTRO 97	BT27728010					1
9	ULS 6X16 PL.PRIM,GUAR,FIL.	T0506016					2

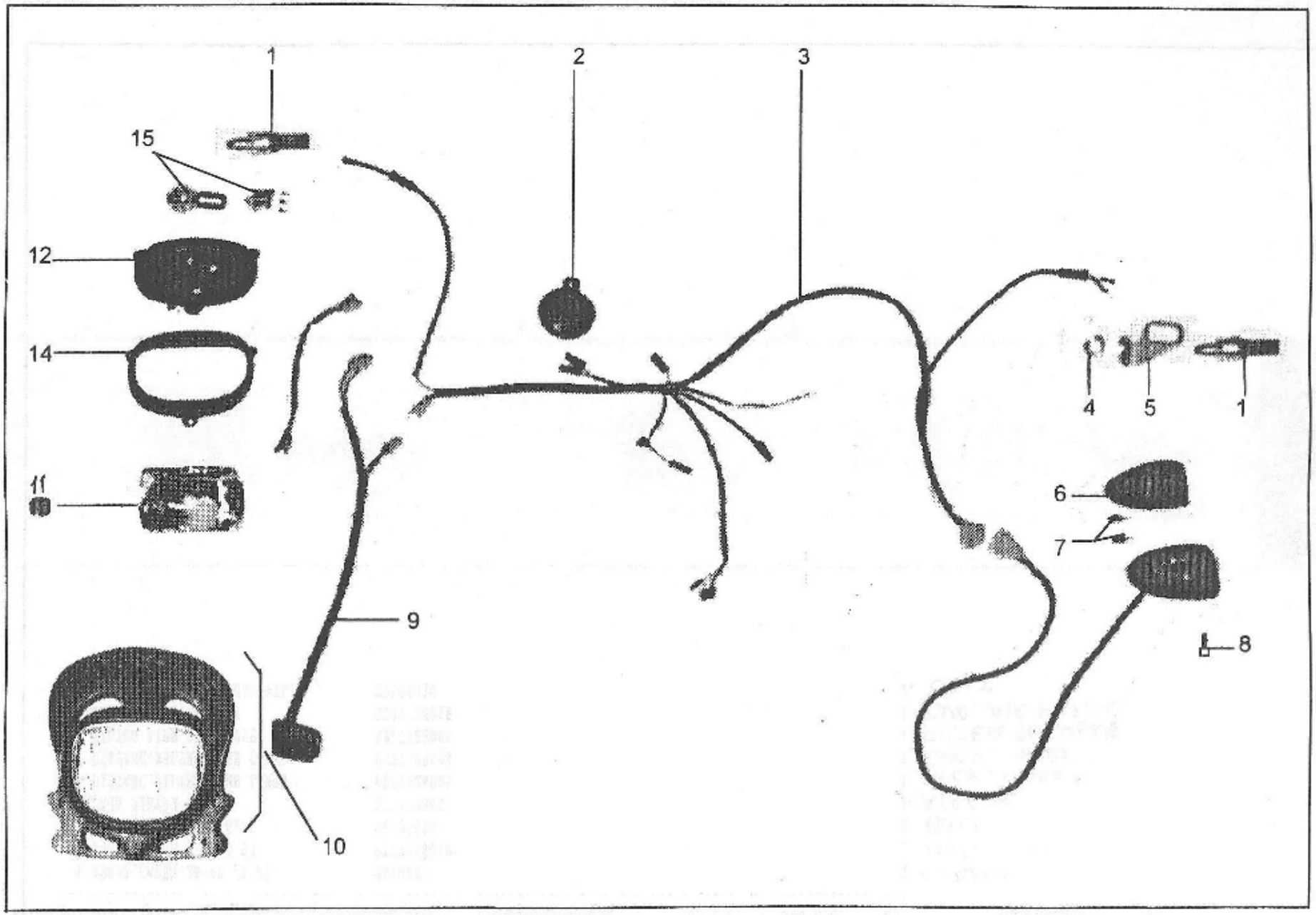
1
2
3
15
12
14
11
9
10
4
5
1
6
7
8

No.	DESCRIPCION	250 C.C.	270 C.C.	320 C.C.	125 C.C.	200 C.C.	C.
1	PULSADOR STOP PEQUEÑO PE0033A00	L300066					2
2	CTO.CLAXON PE40065G10	L300105					1
3	INSTALACION TRIAL 97 PE40053H05	BT27734014					1
4	TUERCA R-1/4 20 F.EXAGONAL 10X3	L300098					1
5	SOPORTE INTERRUPTOR STOP PEQ.	L300097					1
6	CTO.FARO PILOTO TRAS.	L300080					1
7	BOMBILLA 12V 10W	L200118					2
8	TORNILLO ROSCA CHAPA 4*13	T0604013					3
9	CONMUTADOR LUZ 98 REF.	BT27834001		L300037			1
10	CTO.FARO 250-98	BT25820120	BT27820120	BT32820120	BT20820120	BT20820120	1
11	OPTICA FARO 209019	BT27820022					1
12	SOPORTE TAPA OPTICA TRASERA	BT27820027					1
14	SOPORTE OPTICA	BT27820028					1
15	LAMPARA 12V15W CASQUETE	L300115					1

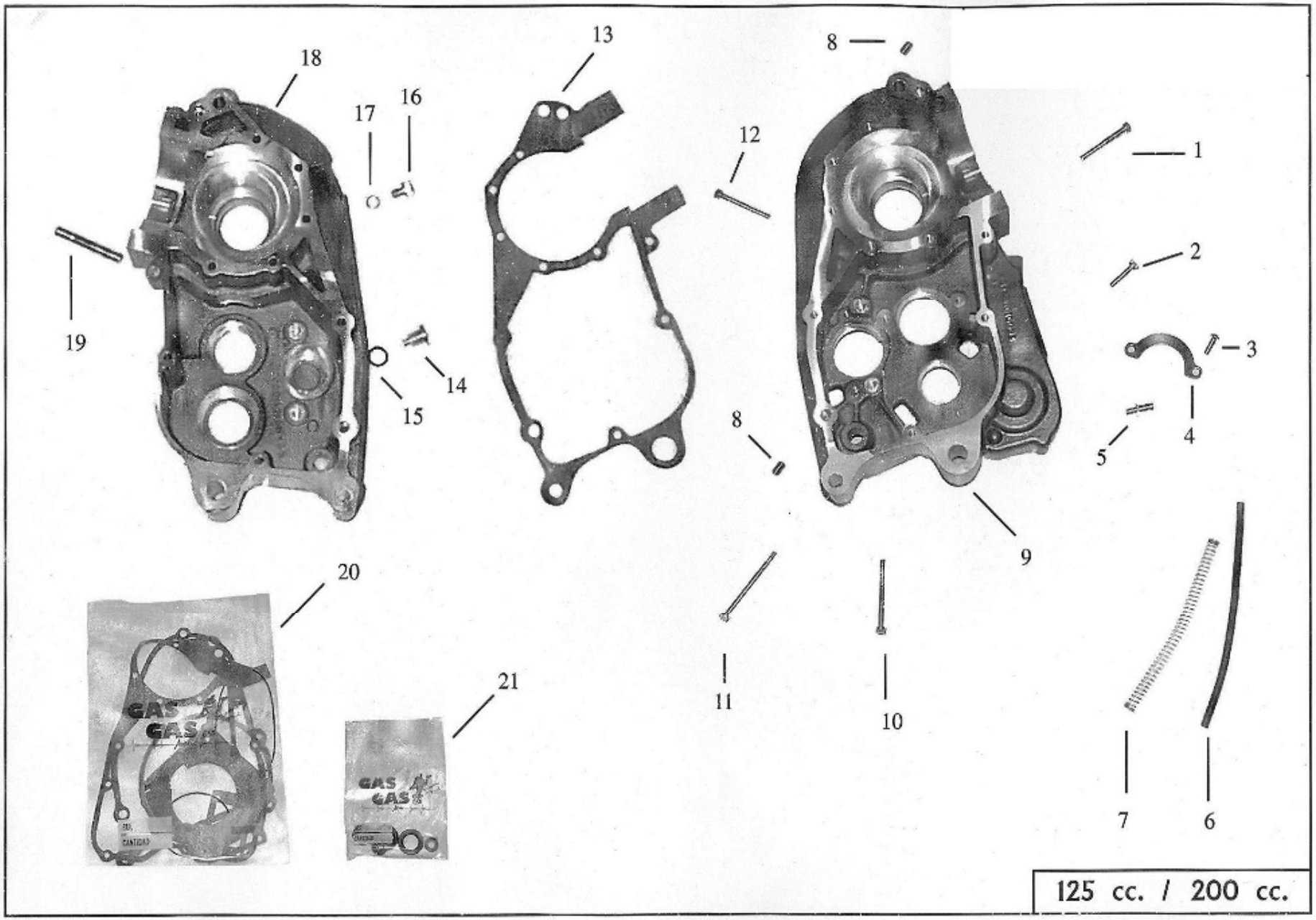
18
17
16
13
8
12
1
2
19
14
15
3
4
5
8
9
20
11
10
21
7
6
GAS GAS
GAS GAS
125 cc. / 200 cc.

Nº	DESCRIPCION	270cc.	125cc.	200cc.	249cc.	321cc.	Cant.
1	Allen 6x50 DIN 912 cárter / Screw, bolt allen 6x50		T0306050	T0306050			4
2	Allen 6x35 / Screw, bolt allen 6x35		T0306035	T0306035			1
3	ULS 6x16 / Screw, bolt ULS 6x16		T0506016	T0506016			2
4	Platina primario / Plate, kickstart		M02628001	M02628001			1
5	Desvaporizador cárter / Breather crankcase		M01032001	M01032001			1
6	Tubo sobrante rad. 5x8 / Tube, breather 5x8		G460000	G460000			1
7	Muelle desvaporizador / Spring breather		M150000	M150000			1
8	Casq. Centr. cárter 6x9x14 / Bushing centralize crankcase		M01017000	M01017000			2
9	Cárter derecho gris plata / Crankcase, right grey silver		MT12710000	MT12710000			1
10	Allen 6x70 8.8 Cárter / Screw, bolt allen 6x70		T0306070	T0306070			5
11	Allen 6x80 DIN 912 cárter / Screw, bolt allen 6x80		T0306080	T0306080			1
12	Allen 6x60 / Screw, bolt allen 6x60		T0306060	T0306060			2
13	Junta cárter 0.3 / Crankcase gasket		MT12944001	MT12944001			1
14	Tapón vaciado aceite con imán / Empty cap oil with magnet		M01016005	M01016005			1
15	Torica tornillo aceite 12x2x / O'ring level plug		M01016100	M01016100			1
16	Allen 8x20 / Screw, bolt 8x20		T0308020	T0308020			1
17	Arandela cobre 8x12 / Washer copper 8x12		M01033000	M01033000			1
18	Cárter izquierdo gris plata / Crankcase left grey silver		MT12710001	MT12710001			1
19	Espárrago cilindro largo / Stud, bolt cylinder		M01612003	M01612003			4
20	Kit juntas trial y pampera / Kit gaskets trial and pampera		MT12944100	MT12944100			1
21	Cto.retenes trial / Cpt. oil seal trial		MT12944200	MT12944200			1

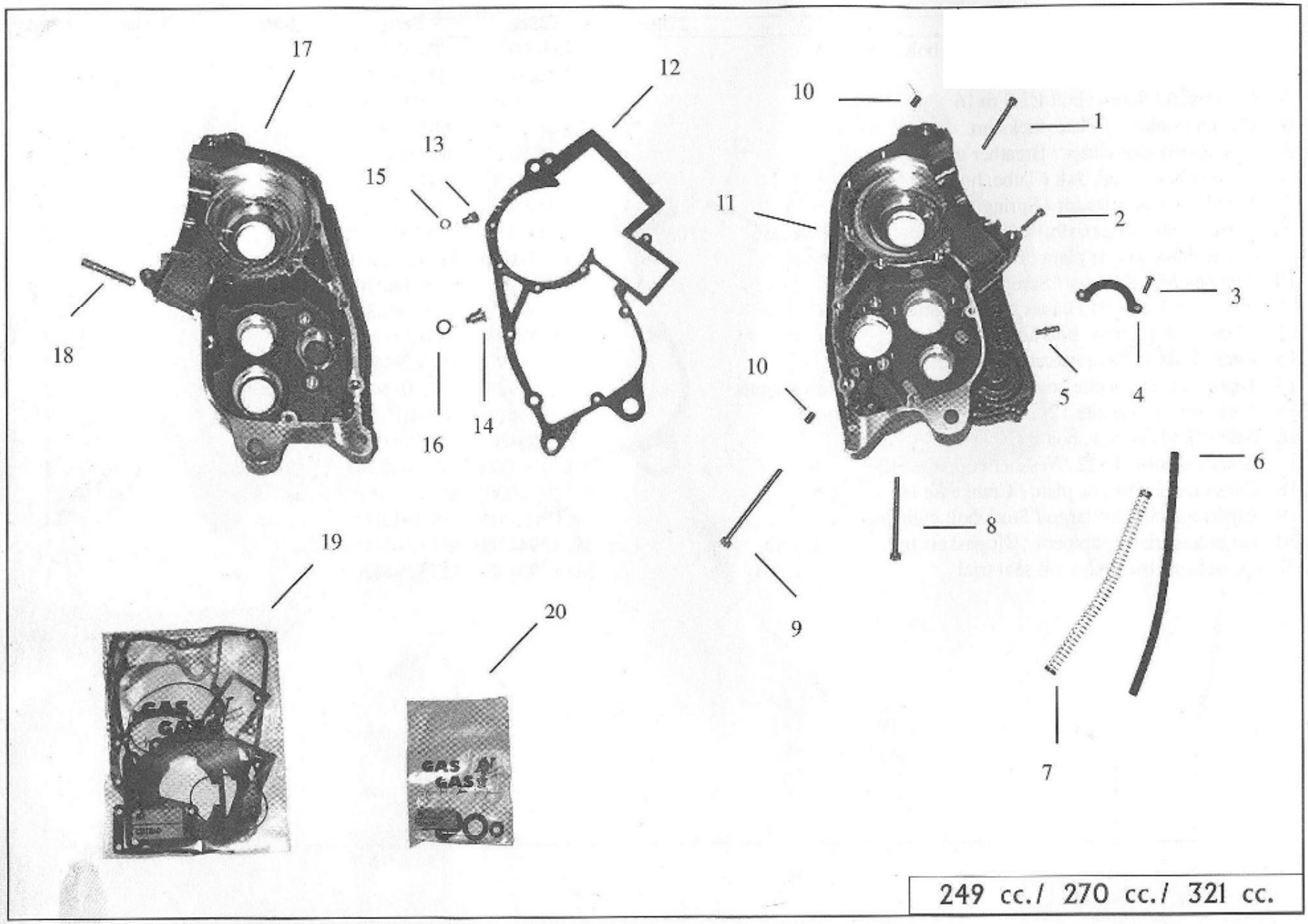

249 cc./ 270 cc./ 321 cc.

Nº	DESCRIPCION	270cc.	125cc.	200cc.	249cc.	321cc.	Cant.
1	Allen 6x50 DIN 912 cárter / Screw, bolt allen 6x50	T0306050			T0306050	T0306050	4
2	Allen 6x25 / Screw, bolt allen 6x25	T0306025			T0306025	T0306025	1
3	ULS 6x16 / Screw, bolt ULS 6x16	T0506016			T0506016	T0506016	2
4	Platina primario / Plate, kickstart	M02628001			M02628001	M02628001	1
5	Desvaporizador cárter / Breather crankcase	M01032001			M01032001	M01032001	1
6	Tubo sobrante rad. 5x8 / Tube, breather 5x8	G460000			G460000	G460000	1
7	Muelle desvaporizador / Spring breather	M150000			M150000	M150000	1
8	Allen 6x70 8.8 Cárter / Screw, bolt allen 6x70	T0306070			T0306070	T0306070	5
9	Allen 6x80 DIN 912 cárter / Screw, bolt allen 6x80	T0306080			T0306080	T0306080	1
10	Casq. Centr. cárter 6x9x14 / Bushing centralize crankcase	M01017000			M01017000	M01017000	2
11	Cárter derecho gris plata / Crankcase, right grey silver	MT27910000			MT27910000	MT27910000	1
12	Junta cárter 0.3 / Crankcase gasket	MT27944001			MT27944001	MT27944001	1
13	Allen 8x20 / Screw, bolt allen 8x20	T0308020			T0308020	T0308020	1
14	Tapón vaciado aceite con imán / Empty cap oil with magnet	M01016005			M01016005	M01016005	1
15	Arandela cobre 8x12 / Washer copper 8x12	M01033000			M01033000	M01033000	1
16	Arandela cobre 12x18x1.5 / Washer copper 12x18x1.5	ME25810030			ME25810030	ME25810030	1
17	Cárter izquierdo gris plata / Crankcase, left grey silver	MT27910001			MT27910001	MT27910001	1
18	Espárrago cilindro largo / Stud,blot cylinder	M01612003			M01612003	M01612003	4
19	Kit juntas trial y pampera / Kit gaskets trial and pampera	MT27944100			MT27944100	MT32944100	1
20	Cto.retenes trial / Cpt. oil seal trial	MT27944200			MT27944200	MT32944200	1

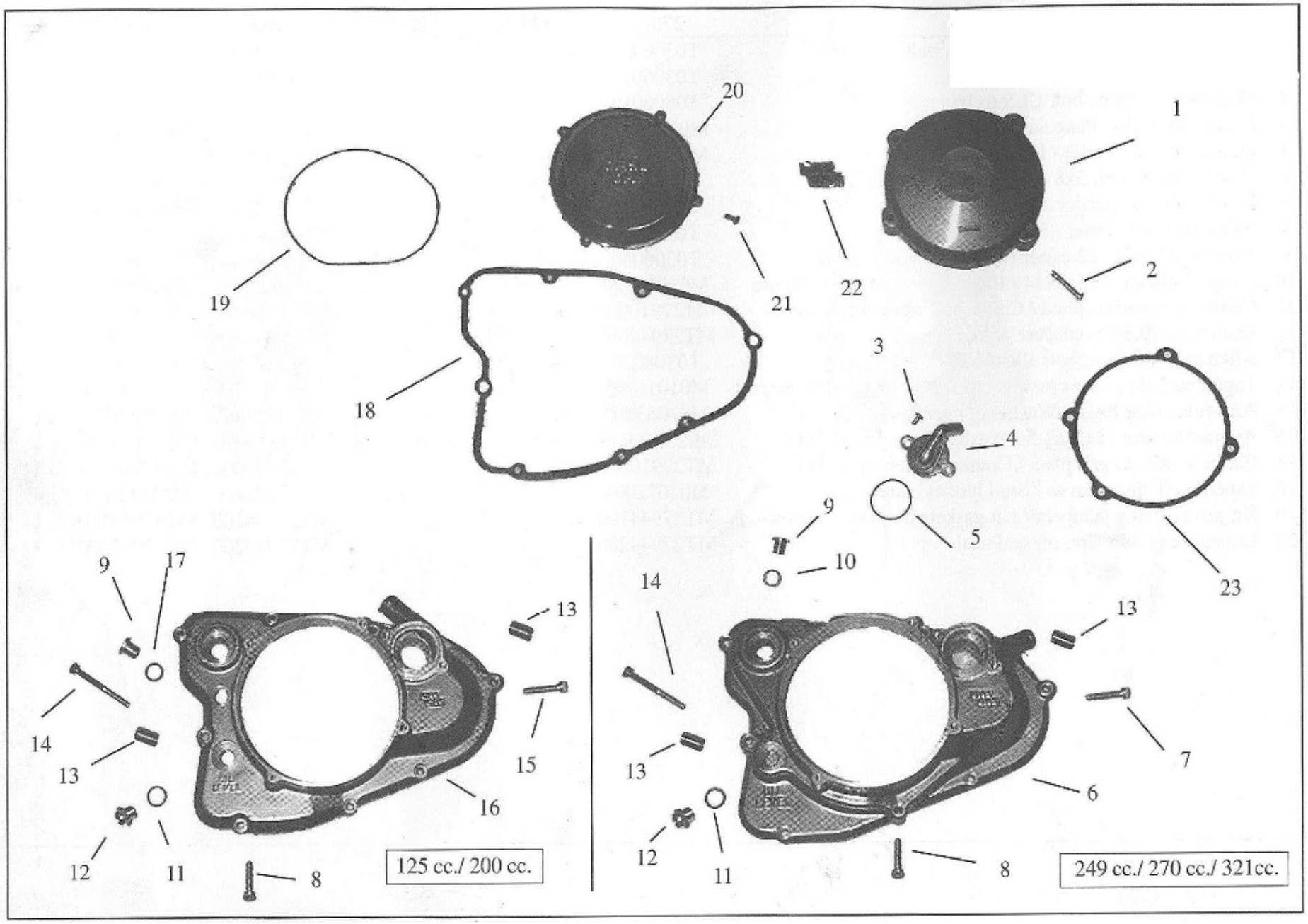
1
2
3
4
5
6
7
8
9
10
11
12
13
14
15
16
17
18
19
20
21
22
23
125 cc./ 200 cc.
249 cc./ 270 cc./ 321cc.

Nº	DESCRIPCION	270cc.	125cc.	200cc.	249cc.	321cc.	Cant.
1	Tapa volante 98 / Cover, fly-wheel	MT27910004					1
2	ULS 6x35 / Screw, bolt allen 6x35	T0506035					4
3	ULS 6x10 dirección / Screw, bolt allen 6x10	T0506010					2
4	Tapa bomba de agua / Cover water pump	M01012110					1
5	Torica tapa bomba agua / O'ring water pump cover	M04433000					1
6	Tapa embrague 99 / Cover clutch	MT27932001			MT27932001	MT27932001	1
7	Allen 6x30 / Screw, bolt allen 6x30	T0306030					1
8	Allen 6x25 / Screw, bolt allen 6x25	T0306025					4
9	Tapón aceite / Oil plug	M01016002					1
10	Arandela de cobre 12x18x1.5 / Washer copper	ME25810030			ME25810030	ME25810030	1
11	Arandela fibra**13X17X1,5** / Washer fiber	**M01016120**					1
12	Visor nivel aceite en aluminio / Oil level clear plug	M01016110					1
13	Casqu. Centr.carter 6x9x14 / Bushi. central. Crank.	M01017000					2
14	Allen 6x55 / Screw, bolt allen 6x55	T0308045					1
15	Allen 6x35 / Screw, bolt allen 6x35	T0306035					1
16	Tapa embra. 125-200, 98 / Cover clutch 125-200		MT27732001CA	MT27732001CA			1
17	Torica tapón aceite 12x16x1.5 / O'ring oil plug		M01016100	M01016100			1
18	Junta tapa embrague / Cover clutch gasket	M04430002					1
19	Torica tapa embrague / O'ring clutch cover	M04434000					1
20	Tapa embra. pequeña pulida / Cover clutch minor	M01012250					1
21	ULS 5x12 / Screw, bolt ULS 5x12	T0505012					4
22	Adh.gas gas metal. / Metallic Gas Gas adhesive	PU00638011	BT20938056	BT20938056	PU00638011	BT32938056	1
23	Junta tapa volante / Gasket fly-wheel cover	M04431000					1

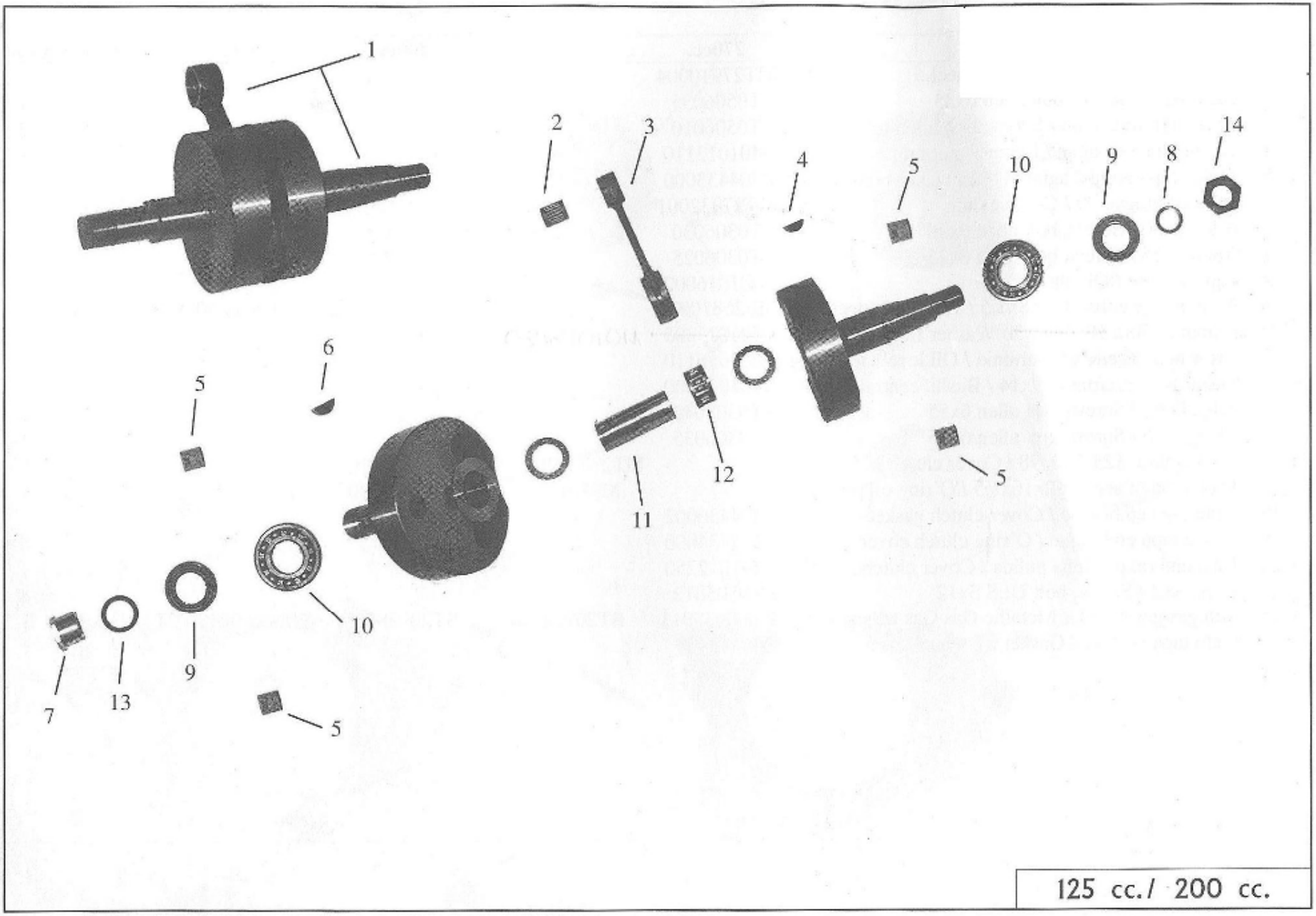
1
2
3
4
5
10
9
8
14
6
5
12
11
5
10
9
13
7
5
125 cc./ 200 cc.

Nº	DESCRIPCION	270cc.	125cc.	200cc.	249cc.	321cc.	Cant.
1	Cto. Cigüeñal 125-200 trial / Cpt. crank shaft assembly		M01210001	M01210001			1
2	Cojinete agujas 16x20x23 / Small end bearing		M01411100	M01411100			1
3	Cto. Biela 125-200 / Cpt. con rod assembly		M01218110	M01218110			1
6	Chaveta piñón contrapeso / Key. pinion		M01223000	M01223000			1
5	Tapón cigüeñal 20x20 125-200 / Crank shaft stopper		MT12712021	MT12712021			4
4	Chaveta volante / Key. ignition		M01224000	M01224000			1
7	Tuerca M16x150 / Nut ignition		M01222000	M01222000			1
8	Arandela volante magn. / Washer ignition magn.		M01221000	M01221000			1
9	Reten cigüeñal 25-40-8ASFP / Oil seal crank shaft		M01217001	M01217001			2
10	Coj. Cigüeñal 6205C3 / Bearing crank shaft		M01216002	M01216002			2
11	Bulon cigüeñal / Crank shaft pin		M01414002	M01414002			1
12	Coj. Cabeza bieleta 24x30x16.8 / Bearing big end		M01415001	M01415001			1
13	Arandela estriada intr. D.20 / Washer pinion crank shaft		M01219000	M01219000			1
14	Tuerca piñón contrapeso / Nut pinion crank shaft		M01220000	M01220000			1

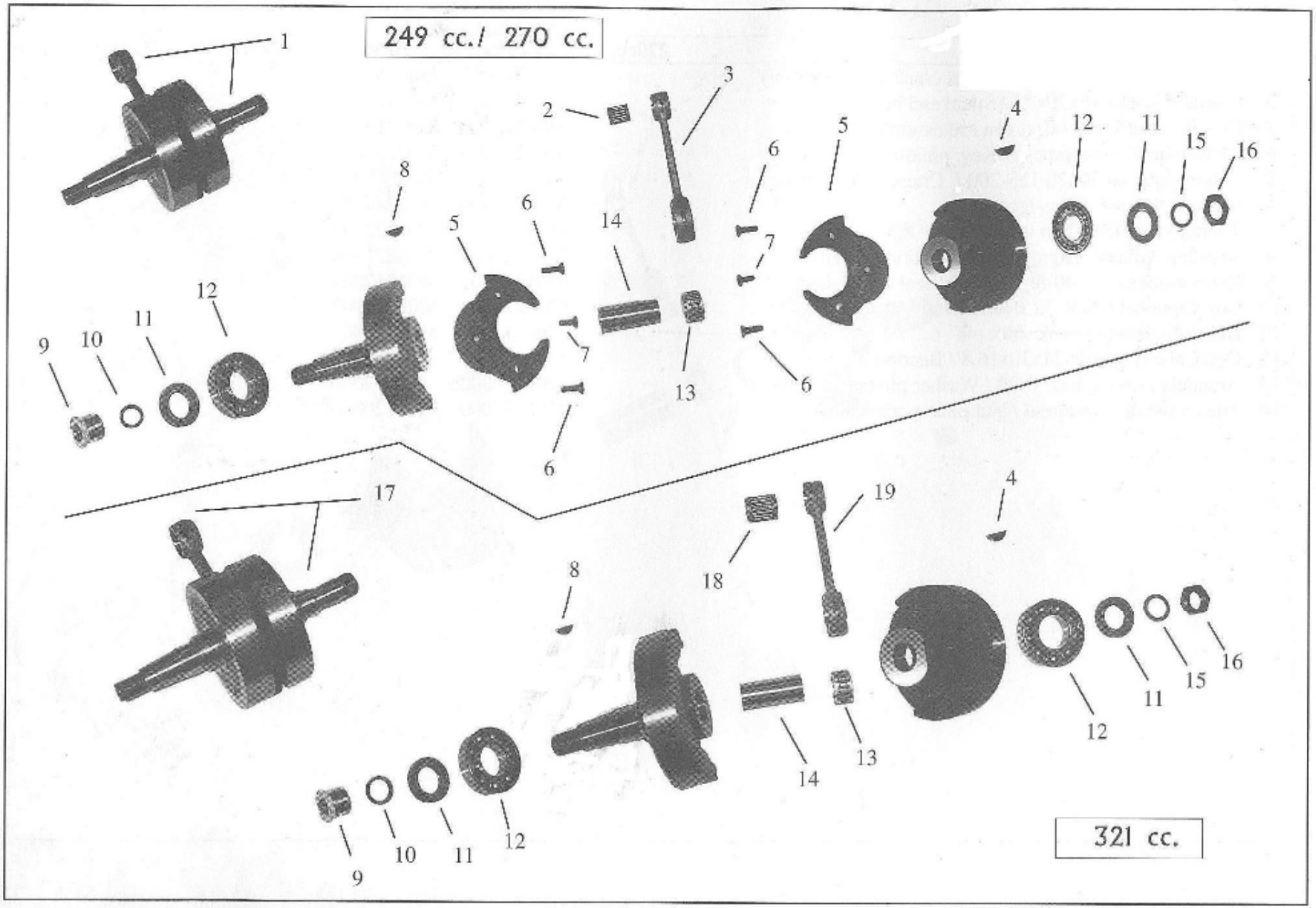
249 cc./ 270 cc.
1
2
3
4
5
6
7
8
9
10
11
12
13
14
15
16
17
18
19
321 cc.

Nº	DESCRIPCION	270cc.	125cc.	200cc.	249cc.	321cc.	Cant.
1	Cto.cigüeñal 250-270 trial / Cpt.crank shaft assembly	MT27912000			MT27912000		1
2	Cojinete agujas pie biela 16x20x23 / Small end bearing	M01411100			M01411100		1
3	Cto. biela 249-270 / Cpt. con rod assembly	MT27812100			MT27812100		1
4	Chaveta piñón contrapeso / Key. Counterweight pinion	M01223000			M01223000	M01223000	1
5	Nylon contrapeso / Counterweight nylon	MT32912021			MT32912021		2
6	Torn. Con. 6x20 / Screw, bolt con. 6x20	T0406020			T0406020		2
7	Torn. Con. 6x16 / Screw, bolt con. 6x16	T0406016			T0406016		1
8	Chaveta volante / Key. Ignition	M01224000			M01224000	M01224000	1
9	Tuerca volante / Nut ignition	M01222000			M01222000	M01222000	1
10	Arandela volante magnético / Washer ignition magn.	M01221000			M01221000	M01221000	1
11	Reten cigüeñal 25-40-8 ASFP / Oil seal crank shaft	M01217001			M01217001	M01217001	2
12	Cojinete cigüeñal 6206 C3 / Bearing crank shaft	M01216001			M01216001	M01216001	2
13	Cojinete cabeza biela 24x30x16.8 / Bearing big end					M01415001	1
14	Bulon cigüeñal / Crank shaft pin	M01414001			M01414001	M01414001	1
15	Arandela estriada intr. D.20 / Washer pinion crank shaft	M01219000			M01219000	M01219000	1
16	Tuerca piñón contrapeso / Nut pinion crank shaft	M01220000			M01220000	M01220000	1
17	Cto. Cigüeñal 321 trial / Cpt. crank shaft assembly 321					MT32912000	1
18	Cojinete agujas pie biela 20x24x29.5 / Small end bearing					M01411000	1
19	Cto. Biela 321 / Cpt. crank shaft assembly					M01218002	1

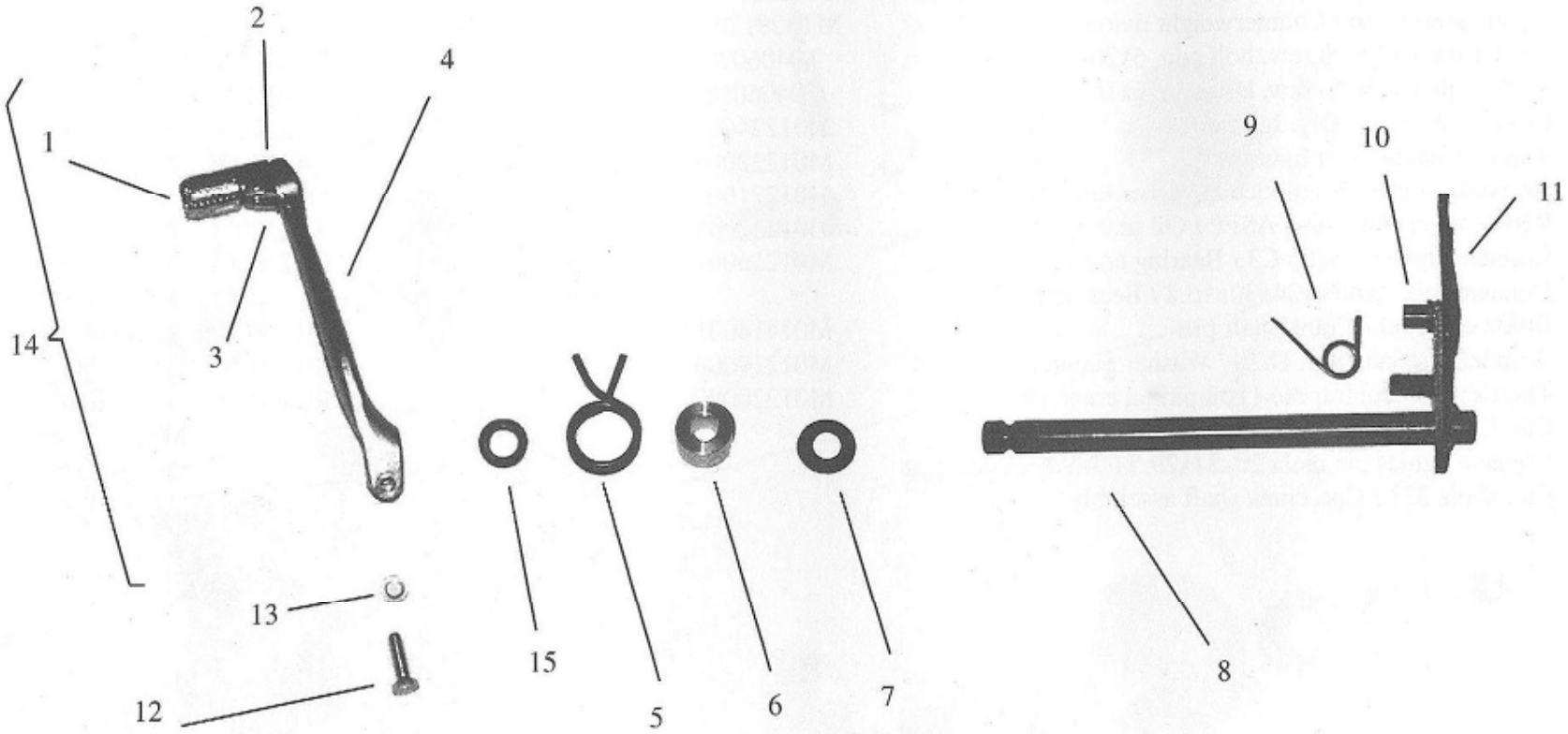
1
2
3
4
5
6
7
8
9
10
11
12
13
14
15

Nº	DESCRIPCION	270cc.	125cc.	200cc.	249cc.	321cc.	Cant.
1	Puntera pedal cambio 5644010 / Pedal, end gear lever	M03810050					1
2	Remache puntera cambio 6x18 / Rivet pedal, end	M03810010					1
3	Muelle punt. pedal camb. / Spring pedal, end gear lever	M121000					1
4	Pedal cambio / Pedal change	MT27936026					1
5	Muelle retorno selector / Spring, come back gear lever	MT27836007	M03812000	M03812000	MT27836007	MT27836007	1
6	Casquillo muelle selector / Pivot, bush spring gear lever	M03813000					1
7	Arandela cambio 26x12.2x0.3 / Washer change	M03810015					1
8	Cto. Eje selector / Cpt. gear lever axle	M03811001					1
9	Muelle platina escorpión /Scorpion work table spring	M03817301					1
10	Remache platina escorpión / Scorpion rivet work table	M03811005					1
11	Platina escorpión* / Scorpion work table	M03811100					1
12	Hexagonal 6x20 / Hexagonal 6x20	T0106020					1
13	Arandela plana 6x12x1,.5 / Washet plane 6x12x1.5	T4006012					1
14	Cto.pedal cambio / Cpt. pedal change	MT27936026C					1
15	Reten selector / Selector oil seal	M03821000					1

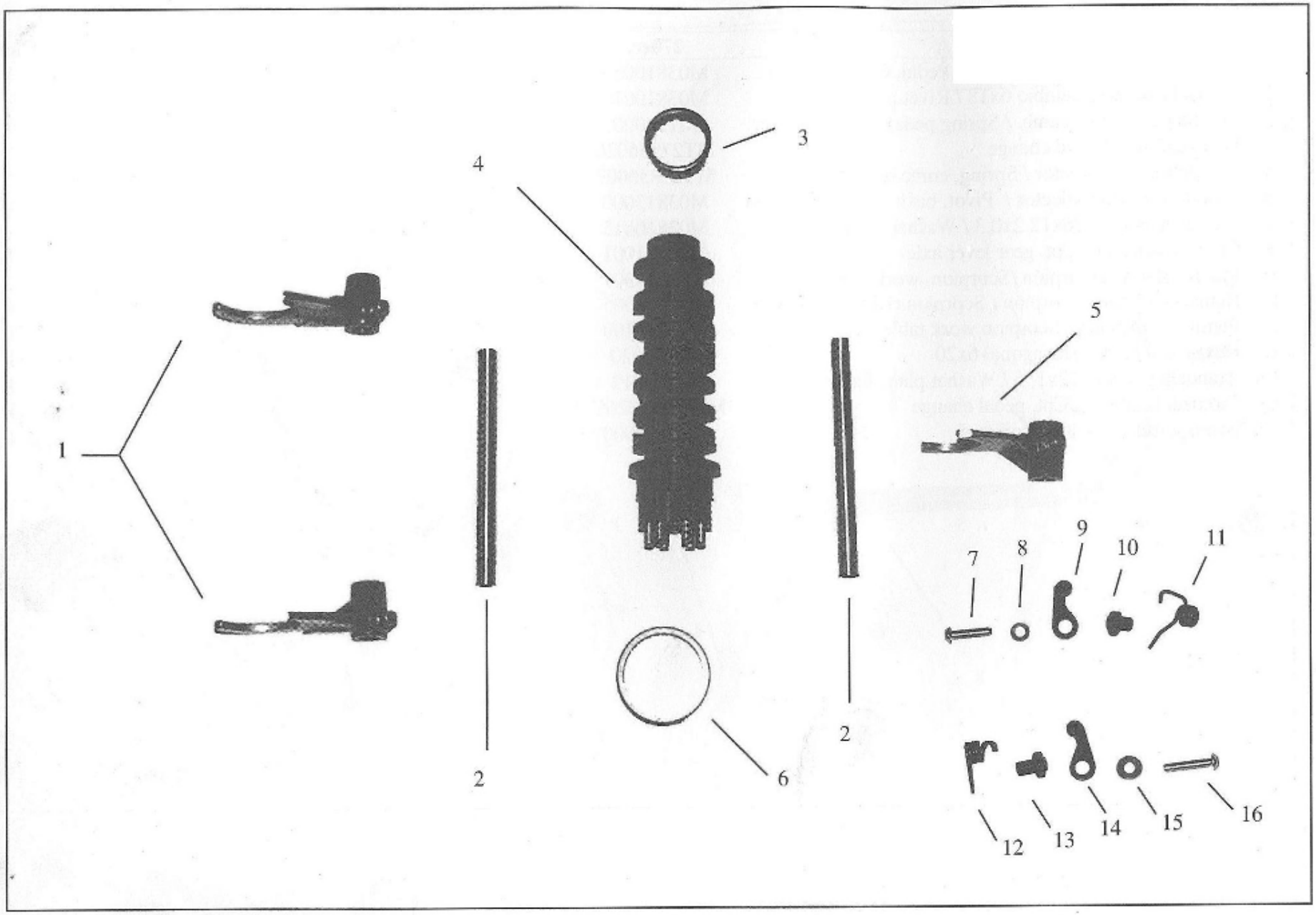
1
2
4
3
6
2
5
7
8
9
10
11
12
13
14
15
16

Nº	DESCRIPCION	270cc.	125cc.	200cc.	249cc.	321cc.	Cant.
1	Horquilla 1-2-3-4/ Selector fork	M03639001					2
2	Eje horquilla 107x10/ Axle selector fork	M03638001					2
3	Cojinete agujas HK25-12/ Bearing needles	M03645000					1
4	Desmodromico/ Selector baarrel	M03637001					1
5	Horquilla 5-6/ Selector fork	M03640000					1
6	Cojinete agujas HK 35-12 / Bearing needles	M03650000					1
7	ULS 6X25 / Screw,bolt uls 6x25	T0506025					1
8	Arandela plana 6x12x1.5/ Washer plane 6x12x1.5	T4006012					1
9	Conjunto fijador punto muerto / Cpt. neutral fasten	M03815110					1
10	Casquillo fijador punto muerto / Neutral fasten bushing	M03818103					1
11	Muelle fijador punto muerto / Neutral fasten spring	M03817201					1
12	Muelle fijador de marchas / Fasten gear spring	M03817100					1
13	Casquillo fijador marchas/ Fasten gear bushing	M03818104					1
14	Conjunto fijador marchas/ Cpt. fasten gear	M03815210					1
15	Arandela 6x20/ Washer 6x20	T4006020					1
16	ULS 6x30/ Screw,bolt ULS 6x30	T0506030					1

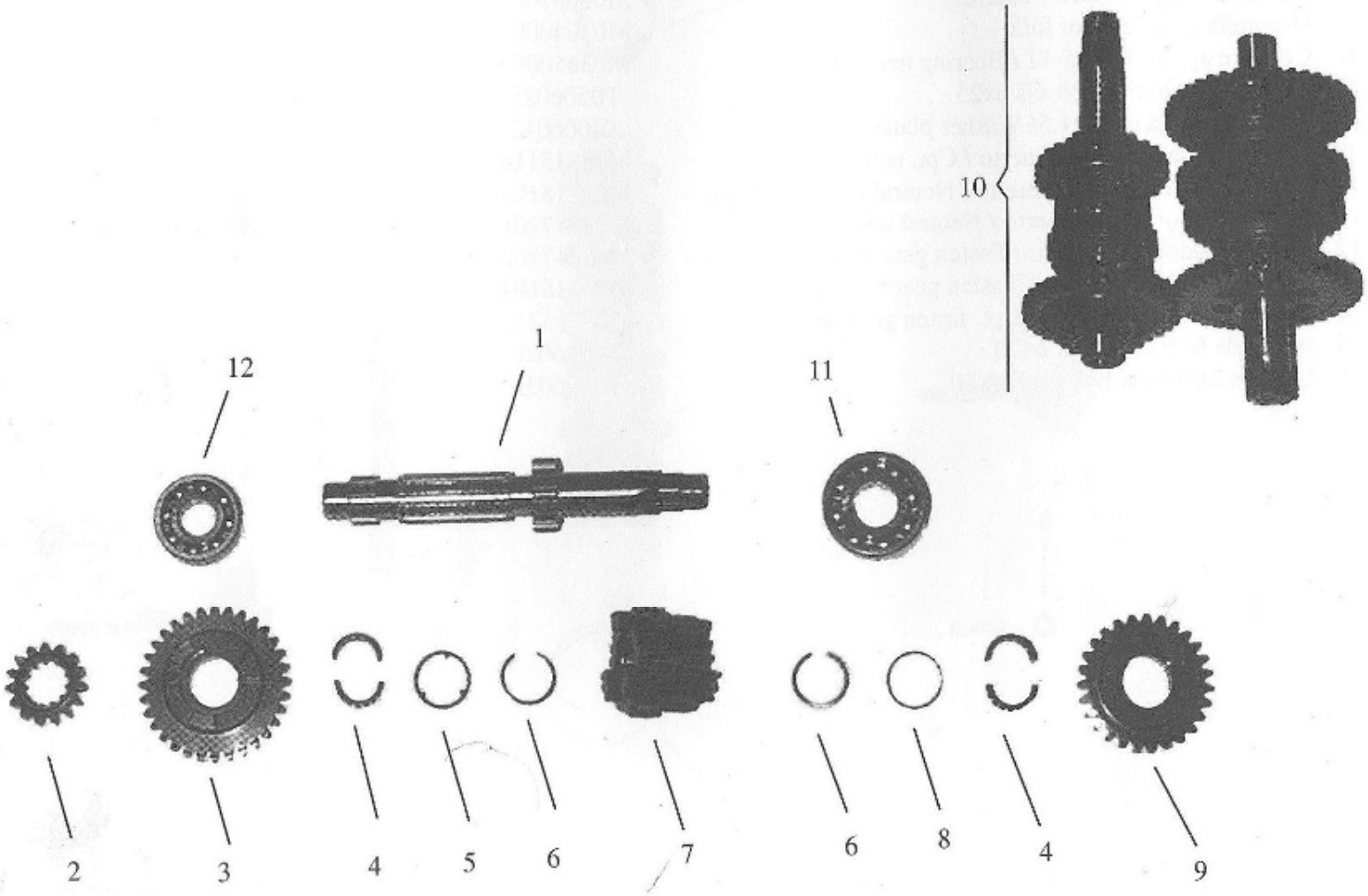
10
12
1
11
2
3
4
5
6
7
6
8
4
9

Nº	DESCRIPCION	270cc.	125cc.	200cc.	249cc.	321cc.	Cant.
1	Eje primario piñón / Axle prim. pinion	MT27836070					1
2	Piñón 2ª primario/ Pinion 2ª prim.	MT27836071					1
3	Piñón 6ª primario/ Pinion 6ª prim.	MT27836074					1
4	Cojinete agujas 18x22x10 / Bearing needles 18x22x10	M03670000					2
5	Arandela secundaria 28x22x1/ Washer secundary 28x22x1	MT27836091					1
6	Clip secundario de 22 mm. Cam. / Clip secundary 22 mm.	MT27836084					2
7	Piñón 3ª/4ª prim./ Pinion 3ª/ 4ª prim.	MT27836072					1
8	Arandela cambio 15x26x0.5 / Washer gear 15x26x0.5	MT27836093					1
9	Piñón 5ª primario/ Pinion 5ª prim.	MT27836073					1
10	Grupo cambio / Complete gear	MT27836000					1
11	Cojinete 20x47x14 (6204) / Bearing 20x47x4	M03610001					1
12	Cojinete 17x40x12 (6203) / Bearing 17x40x12	M03620000					1

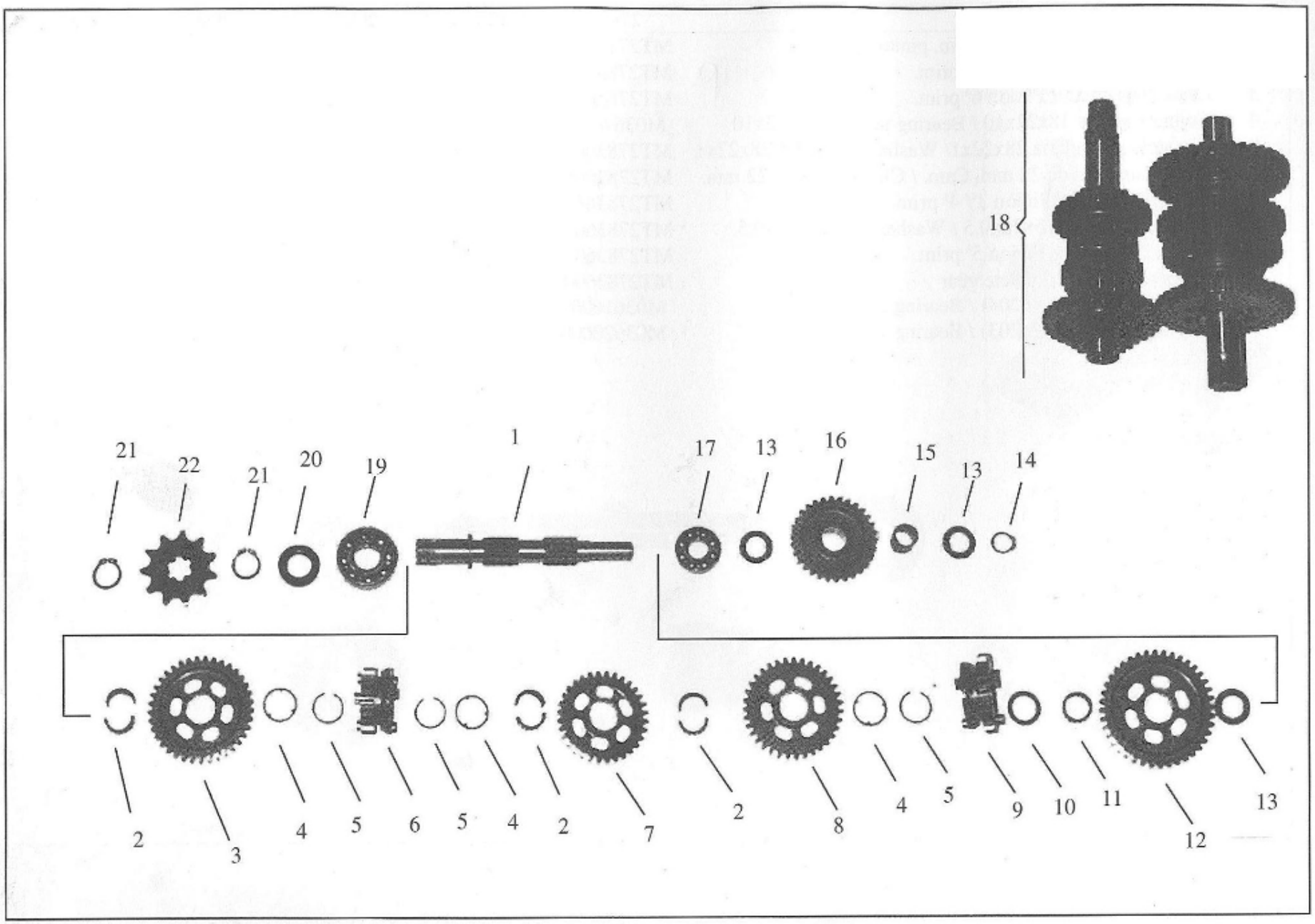
18
21
22
21
20
19
1
17
13
16
15
13
14
2
3
4
5
6
5
4
2
7
2
8
4
5
9
10
11
12
13

Nº	DESCRIPCION	270cc.	125cc.	200cc.	249cc.	321cc.	Cant.
1	Eje secundario / Axle secondary	MT27836075					1
2	Cojinete agujas 18x22x10 / Bearing needles 18x22x10	M03670000					3
3	Piñón secundario de 2ª / Secondary pinion 2ª	MT27836077					1
4	Arandela secundaria 28x22x1 / Washer secundary 28x22x1	MT27836091					3
5	Clip secundario de 22 mm. Cam. / Secundary clip 22 mm.	MT27836084					3
6	Piñón 6ª secun. / Secun. Pinion 6ª	MT27836081					1
7	Piñón 4ª secun. / Secun. Pinion 4ª	MT27836079					1
8	Piñón 3ª secun. / Secun. Pinion 3ª	MT27836078					1
9	Piñón 5ª secun. / Secun. Pinion 5ª	MT27836080					1
10	Arandela piñón int. 15x26x0.5 / Washer int. Pinion	MT27836093					1
11	Cojinete piñón int. Arra.K-15-19-17/ Bearing int. Pinion	M02621001					1
12	Piñón 1ª secundari / Secondary pinion 1ª	MT27836076					1
13	Arandela piñón int. 15x26x0.5 / Pinion int. Washer	M02622001					3
14	Clip de 15mm piñón int. Arra. / Pinion clip 15 mm.	M02623000					1
15	Cojinete piñón int./ Pinion bearing int.	M02621001					1
16	Piñón inter. arranque / Int. Pinion .	M02620003					1
17	Cojinete 15x35x11 (6202) / Bearing 15x35x11	M03621000					1
18	Grupo cambio / Complete gear	MT27836000					1
19	Cojinete 20x47x14 (6204) / Bearing 20x47x14	M03610001					1
20	Reten salida 20-32-7 827S / Oil seal external 20-32-7 827S	M03633000					1
21	Clip de 20 piñón salida / Pinion clip 20	MT27836052					2
22	Piñón salida / Out pinion	M03634000					1

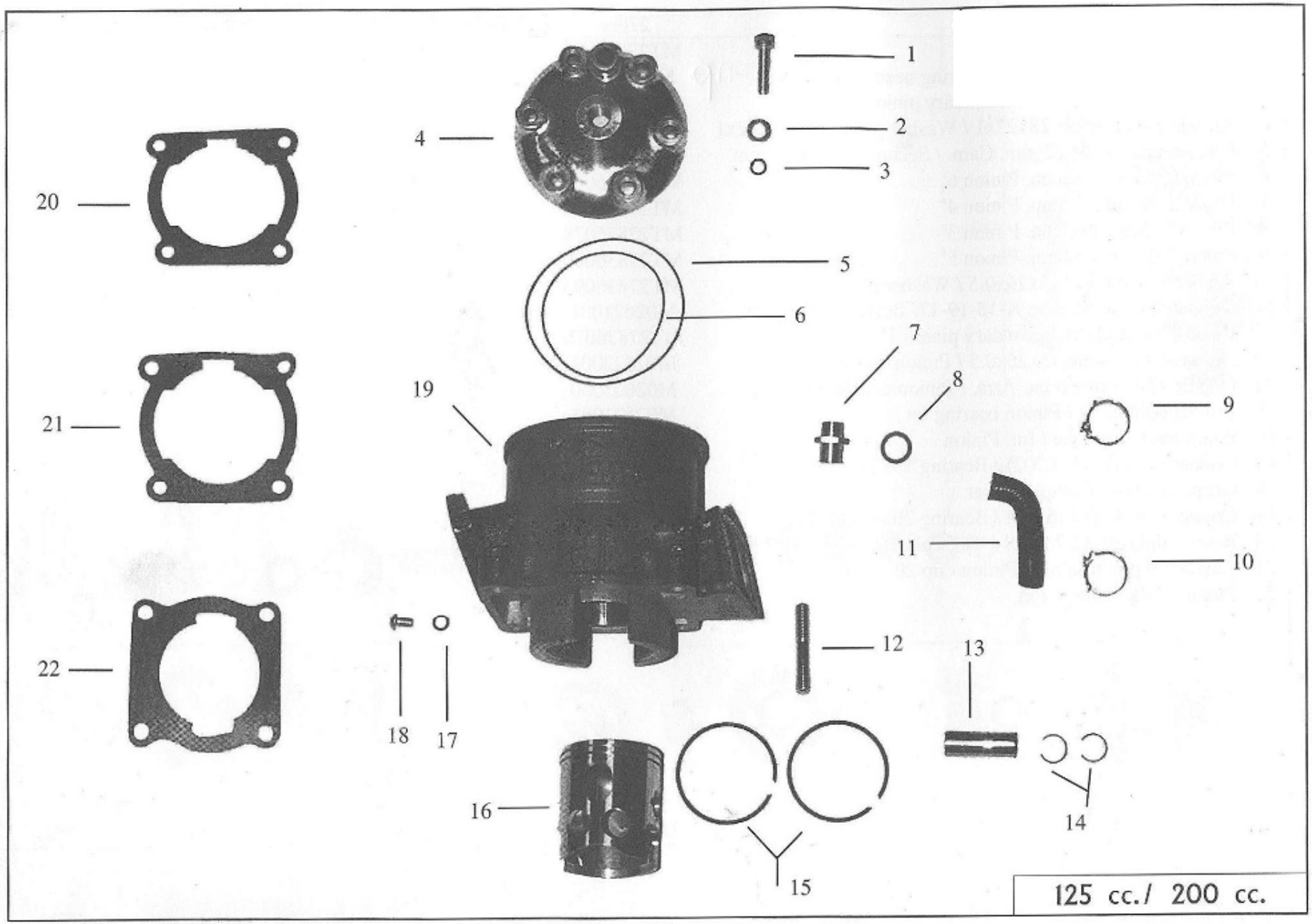
1
2
3
4
5
6
7
8
9
10
11
12
13
14
15
16
17
18
19
20
21
22
125 cc./ 200 cc.

Nº	DESCRIPCION	270cc.	125cc.	200cc.	249cc.	321cc.	Cant.
1	Allen 8x30 / Screw , bolt allen 8x30		T0308030	T0308030			6
2	Arandela plana 8x17x1.5 / Washer plane 8x17x1.5		T4008017	T4008017			6
3	Torica 7x2 / O'ring 7x2		M01612010	M01612010			6
4	Culata trial 98 / Cyl. head		MT12716000	MT20716000			1
5	Torica culata /O'ring cyl. Ext.		M01619135	M016119135			1
6	Torica culata interior / O'ring cyl. Int.		M01619130	M01619130			1
7	Racord cilindro / Racord cylinder		M01612021	M01612021			1
8	Arandela fibra 15x20x2 racord / Washer fibre 15x20x2		M01612026	M01612026			1
9	Abrazadera cobre de 19 / Clamp, clip		L200043	L200043			1
10	Abrazadera cobre-20/ Clamp, clip		L200035	L200035			1
11	Tubo agua curvado / Water tube curve		L200008	L200008			1
12	Espárrago cilindro corto / Stud, bolt cylinder		M01612005	M01612005			4
13	Bulon pistón / Pin. piston		M01419002	M01419003			2
14	Clip pistón / Clip piston		M01417052	M01417053			2
15	Aro tipo plano / Piston ring plan		M01417003	MT20716040			1
16	Conjunto pistón / Cpt. piston		M01410003	MT20716020			1
17	Arandela fibra 6x10x1.5/ Washer fibre 6x10x1.5		T4006010	T4006010			1
18	ULS 6x10 / Screw, bolt ULS 6x10		T0506010	T0506010			1
19	Cilindro 99 / Cylinder 99		MT12916022	MT20916022			1
20	Junta cilindro 0.3 mm. / Gasket cylinder		M04411003	M04411003			1
21	Junta cilindro 0.5 mm. / Gasket cylinder		MT20844000	MT20844000			1
22	Junta cilindro 1 mm. / Gasket cylinder		MT12744010	MT20844010			1

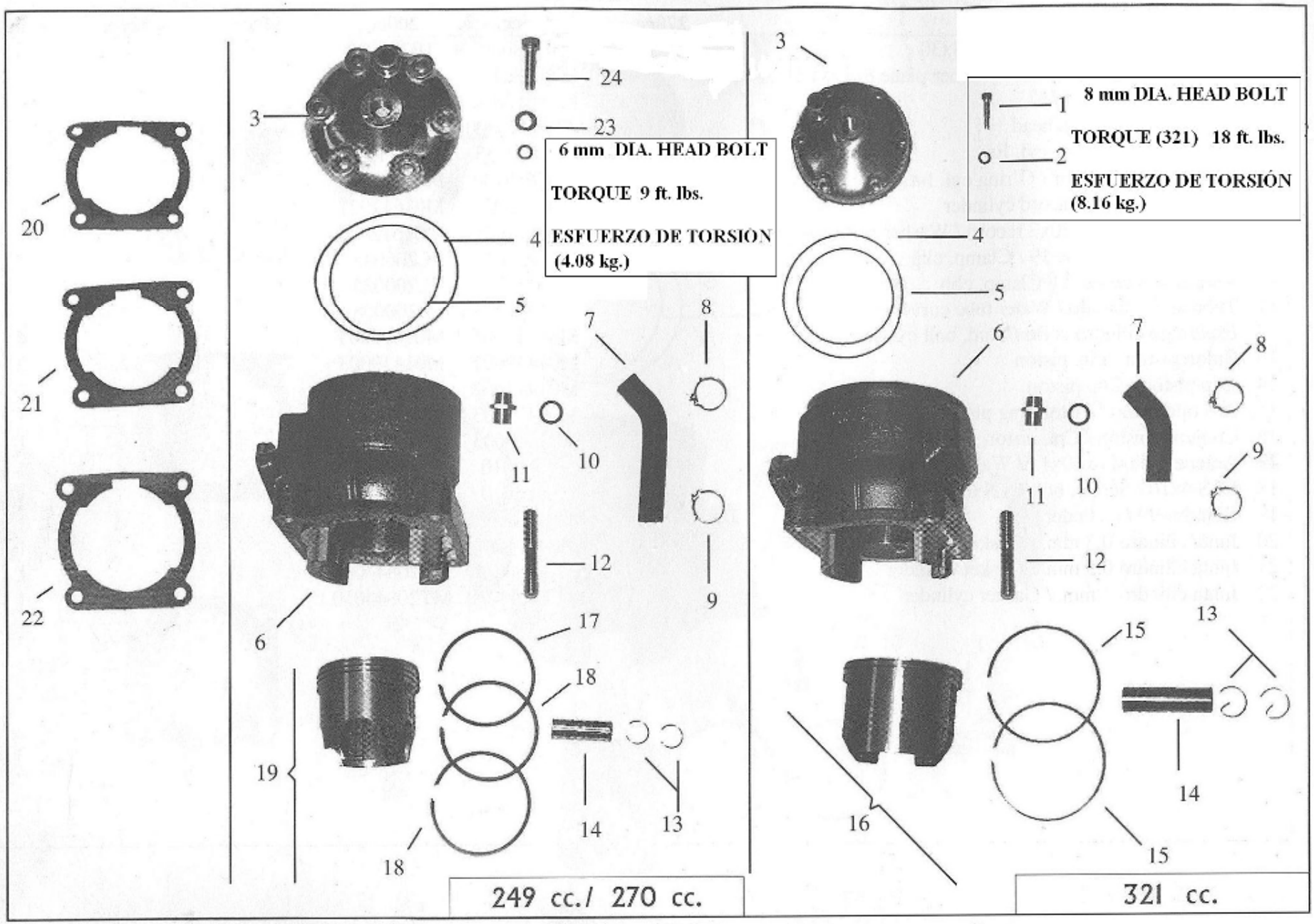
6 mm DIA. HEAD BOLT
TORQUE 9 ft. lbs.
ESFUERZO DE TORSIÓN
(4.08 kg.)
8 mm DIA. HEAD BOLT
TORQUE (321) 18 ft. lbs.
ESFUERZO DE TORSIÓN
(8.16 kg.)
249 cc./ 270 cc.
321 cc.

Nº	DESCRIPCION	270cc.	125cc.	200cc.	249cc.	321cc.	Cant.
1	Allen 8x30 / screw, bolt allen 8x30					T0308030	6
2	Torica 7x1.5 / O'ring 7x1.5					M01612011	6
3	Culata trial / Cyl. Head	MT27816000			MT25916000	MT32916000	1
4	Torica culata / O'ring cyl. Ext.	MT27816060			MT27816060	M01619211	1
5	Torica culata interior / O'ring cyl. Int.	M01619215			M01619215	M01619216	1
6	Cilindro / Cylinder	MT27916022			MT25916022	MT32916022	1
7	Tubo agua curvado / Water tube curve	L200007			L200007	L200007	1
8	Abrazadera cobre de 19 / Clamp, clip	L200043			L200043	L200043	1
9	Abrazadera cobre de 20 / Clamp, clip	L200035			L200035	L200035	1
10	Arandela fibra 14x20x2 racord / Washer fibre	M01612026			M01612026	M01612026	1
11	Racord cilindro / Racord cylinder	M01612021			M01612021	M01612021	1
12	Espárrago cilindro largo / Stud, bolt cylinder	M01612003			M01612003	M01612003	4
13	Clip pistón / Clip piston	M01417051			M01417051	M01417050	2
14	Bulon pistón / Pin. Piston	M01419001			M01419001	M01419004	1
15	Aro pistón tipo L / Piston ring type L					M01417000	2
16	Conjunto pistón / Cpt. piston					M01410103	1
17	Aro pistón tipo L / Piston ring tipe L	M01417005			M01417002		1
18	Aro pistón tipo plano / Piston ring plan	M01417101			M01417100		2
19	Conjunto pistón / Cpt. pinston	MT27716020			MT25916020		1
20	Junta cilindro 0.1 mm. / Gasket cylinder	MT27844010			MT27844010	M04411010	1
21	Junta cilindro 0.3 mm. / Gasket cylinder	MT27844009			MT27844009	MO4411007	1
22	Junta cilindro 0.5 mm. / Gasket cylinder	MT27844000			MT27844000	M04411005	1
23	Arandela cobre 6x12 / Washer copper	T4006713			T4006713		6
24	Allen 6x25 / Screw, bolt allen 6x25	T0306025			T0306025		6

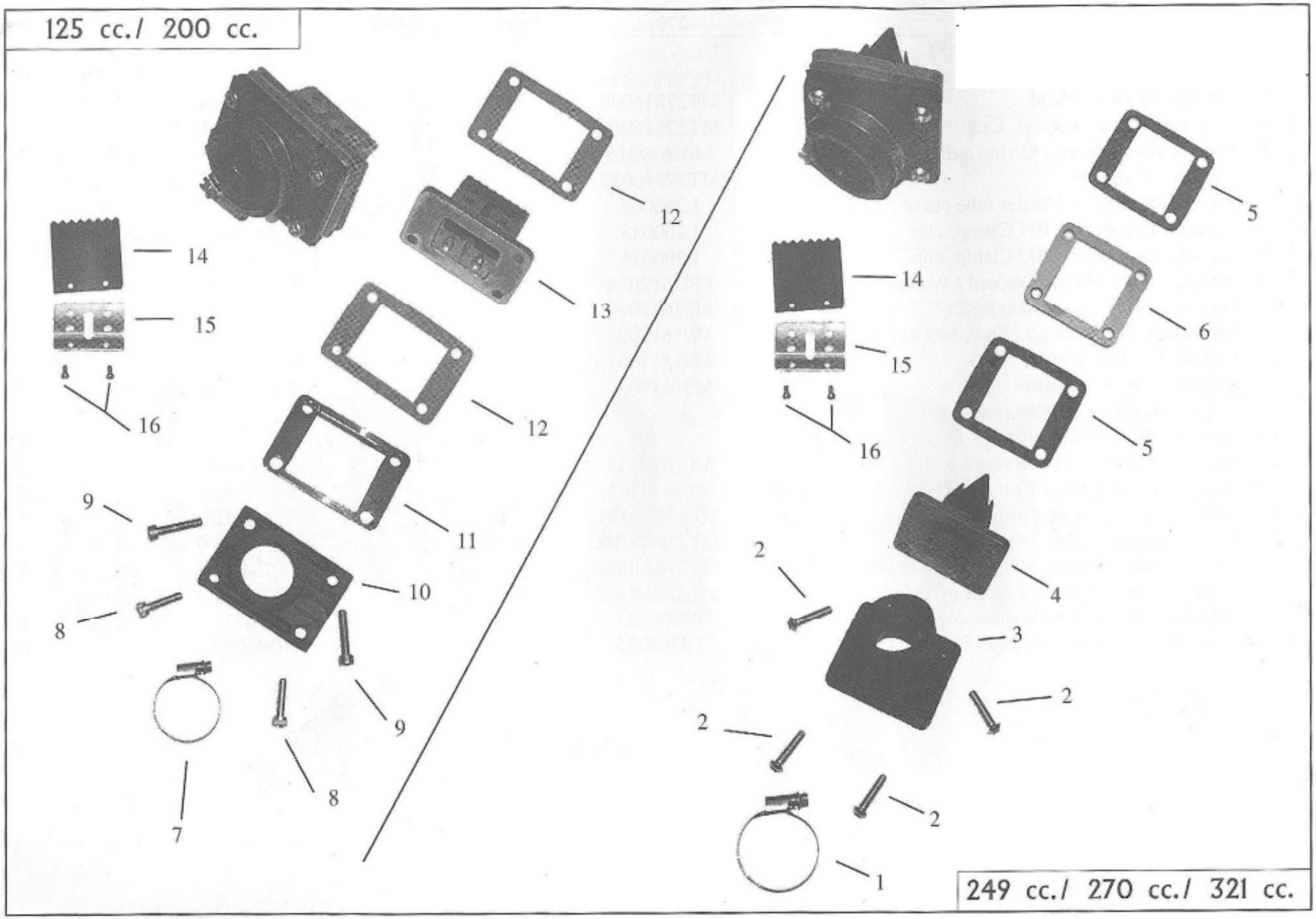
125 cc./ 200 cc.
14
15
16
12
13
12
11
9
10
8
9
8
7
5
6
14
15
16
5
4
2
3
2
2
2
1
249 cc./ 270 cc./ 321 cc.

Nº	DESCRIPCION	270cc.	125cc.	200cc.	249cc.	321cc.	Cant.
1	Abrazadera 30-45 / Clamp 30-45	B640005			B640005	B640005	1
2	ULS 6x25 / Screw, bolt ULS 6x25	T0506025			T0506025	T0506025	4
3	Tubera admisión / Inlet manifold	M01615004			M01615004	M01615004	1
4	Caja de láminas / Reed block assembly	M01617200			M01617200	M01617200	1
5	Juntas tubera / Gasket inlet manifold	M04416003			M04416003	M04416003	1
6	Distan. caja lám. 249-270-321/ Distan. Reed bolck assy.	M01614005			M01614005	M01614005	1
7	Abrazadera 24-40 / Clamp 24-40		B640001	B640001			1
8	Allen 5x20 / Screw, bolt allen 5x20		T0305020	T0305020			2
9	Allen 5x25 / Screw, bolt allen 5x25		T0305025	T0305025			2
10	Tubera admisión 125-200 / Inlet manifold		M01615003	M01615003			1
11	Distan. caja lám. 125-200 / Distan reed block assy. 125-200		M01618000	M01618000			1
12	Juntas tubera 125-200 / Gasket inlet manifold 125-200		M04416002	M04416002			1
13	Caja de láminas 125-200 / Reed block assembly 125-200		M01617000	M01617000			1
14	Juego de láminas / Reeds petal assembly	M01616000					1
15	Topes láminas / Rev plate reeds petal	M01616010					2
16	Tornillo philips láminas M4x8 / Screw, bolt philips reeds	T0604008					4

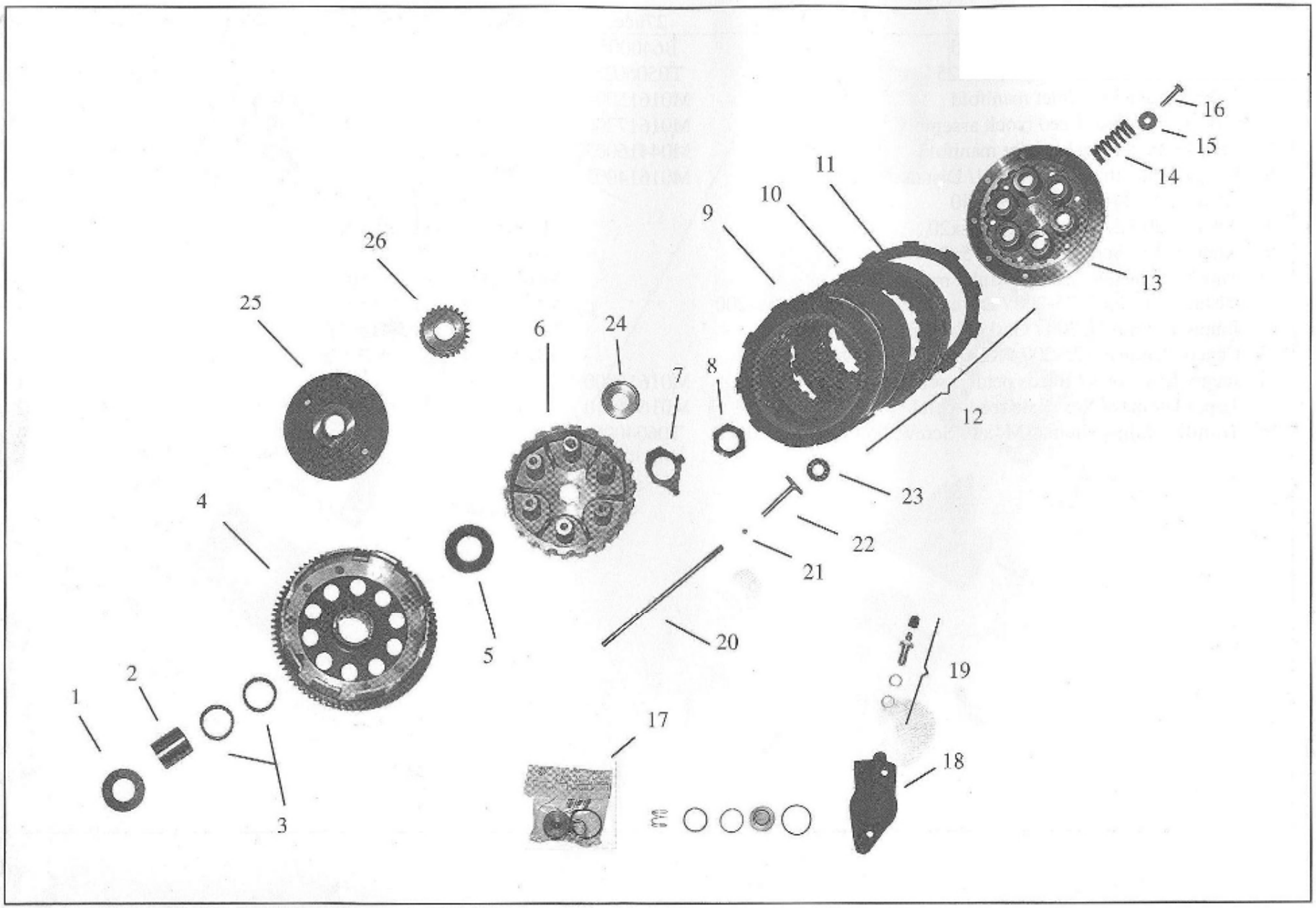
1
2
3
4
5
6
7
8
9
10
11
12
13
14
15
16
17
18
19
20
21
22
23
24
25
26

Nº	DESCRIPCION	270cc.	125cc.	200cc.	249cc.	321cc.	Cant.
1	Arandela 20.15x38x3.25 / Washer cover	M03226000					1
2	Casquillo embrague 20x26x28.6 / Pivot, bush clutch	M03224000					1
3	Cojinete agujas K26-30-13 / Bearing needles	M03225000					2
4	Corona embrague / Helical gear set assy	M03210002					1
5	Arandela intermedio 17.5x34x1 / Washer intermediate	M03223000					1
6	Cubo embrague 98 / Hub, clutch	MT27832005					1
7	Arandela fijación cubo / washer lock hub		M03222001	M03222001			1
8	Tuerca fijación cubo bal.piñon / Nut fij. Hub bal. pinion	M03221000					1
9	Disco embrague mixto / Clutch disk mixed	MT27732053					1
10	Disco embrague hierro / Clutch disk iron	MT27732052					5
11	Disco embrague forrado / Clutch disk lined	MT27732051					6
12	Cto.discos embrague 98 / Cpt. clutch disk	MT27732050					1
13	Plato embrague 98 / Clutch plate	MT27832006					1
14	Muelle embrague / Clutch spring	M03216002					6
15	Arandela muelle emb. 17x5x1.5 / Washer clutch spring	M03218001					6
16	Hexagonal 5x20 (12.9) DIN 933 / Hexagonal	T0105020					6
17	Kit pinza embrague hidráulico / Kit caliper clutch hydraulic	M01059000					1
18	Pinza embrague hidráulico / Caliper clutch hydraulic	M01050000					1
19	Racord pinza embrague hidrau. / Bleed screw, union bolt	M01060000					1
20	Varilla embrague hidráulico / Push rod clutch hydraulic	M03228002					1
21	Bola varilla embrague 5mm / Ball bearind clutch	M03235001					1
22	Bolet varilla embrague / Mushroom adjuster clutch	M03233000					1
23	Coj.prensa embrague AX1022 / Bearing clutch end plate	M03234001					1
24	Casq. Cent. prensa embr. / Bushing centralize clutch press	MT27832052			MT27832052	MT27832052	1
25	Piñón contrapeso / Counterweight pinion	M03210000					1
26	Piñón transmisión primaria / Transmission primary pinion	M03210001					1

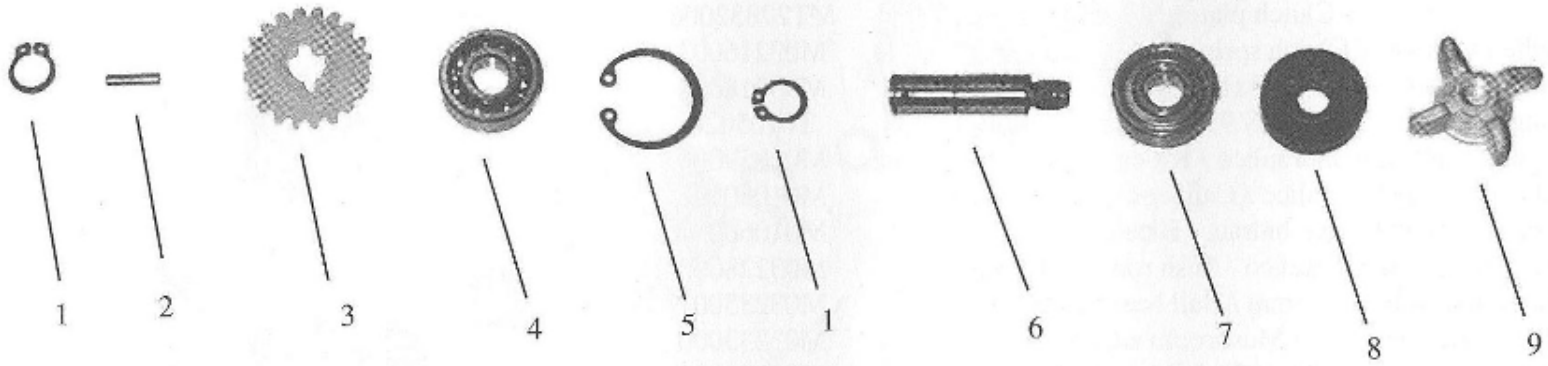
1
2
3
4
5
1
6
7
8
9

Nº	DESCRIPCION	270cc.	125cc.	200cc.	249cc.	321cc.	Cant.
1	Seeger de 10 eje bomba / Spindle pump, seeger 10	M03314011					1
2	Rodillo 3x14 bomba agua/ Pump water roller 3x14	MT27710036					1
3	Piñón mando bomba agua /Control pinion water	M01230000					1
4	Cojinetes turbina 600C3 bom. / Turbine bearing 600C3	M03313000					1
5	Seeger int. 26 gru.tope cojinetes / Int. Seeger 26	M03314012					1
6	Eje turbina 98 / Axle turbine 98	MT27710006					1
7	Cojin. 6000 Z c3 bomb. agua / Bearing water pump	M03313001					1
8	Reten 12*26*7ª duo FPM Viton / Water pump seal	M01012121					1
9	Turbina / Turbine	M03310000					1

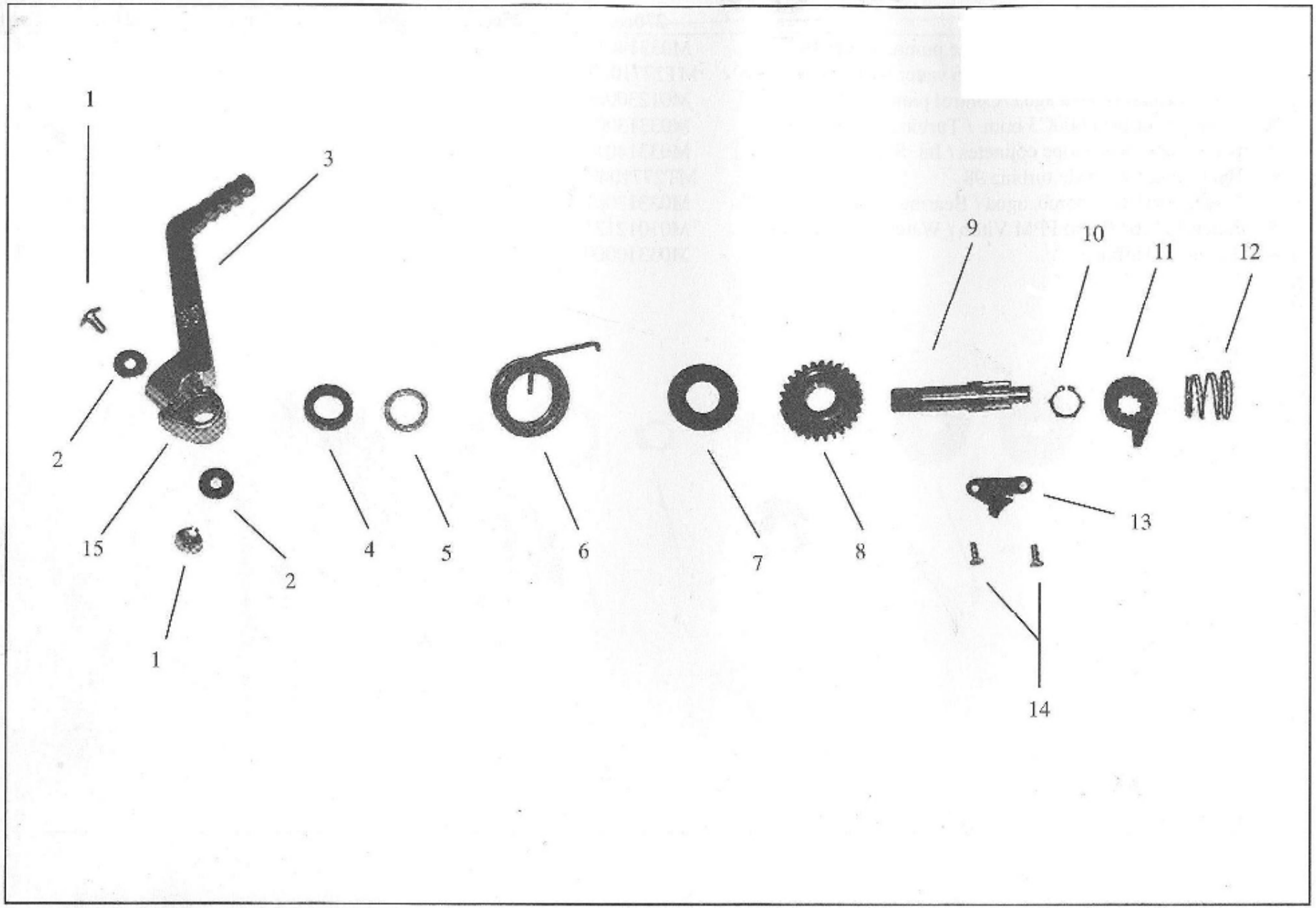
1
3
9
10
11
12
2
15
2
4
5
6
7
8
13
1
14

Nº	DESCRIPCION	270cc.	125cc.	200cc.	249cc.	321cc.	Cant.
1	Tornillo 6x12 cabota tork / Screw, bolt allen special	T0316012					2
2	Arandela 6x18x1.5 DIN 9021 / Washer plane 6x18x1.5	T4006018					2
3	Cto.pedal arranque alum.D.18 / Cpt. Kickstart pedal	M02610102					1
4	Reten arranque 18-28-7 822N / Oil seal kickstart	M02627001					1
5	Tope aluminio 4.5x18x25 arran. / Top aluminium kickstart	M02612002					1
6	Muelle retorno pedal / Pedal come back spring	MT27836007					1
7	Arandela arranque 46x18.6x1 / Washer kickstart	M02614002					1
8	Piñón arranque / Pinion kickstart	MT27836002					1
9	Eje arranque 98 / Kickstart axle	MT27836003					1
10	Seeger E20 DIN983 / Seeger E20	MT27836052					1
11	Trinquete arranque / Kickstart pawl	ME25636004					1
12	Muelle trinquete arranque / Kickstart pawl spring	ME25636006					1
13	Platina trinquete arranque 98 / Kickstart pawl worktable	MT27836005					1
14	Hexagonal 5x20 (12.9) DIN 933 / Hexagonal 5x20	T0105020					2
15	Muñequilla arranque D.18 / Kickstart trunnion	M02610052					1

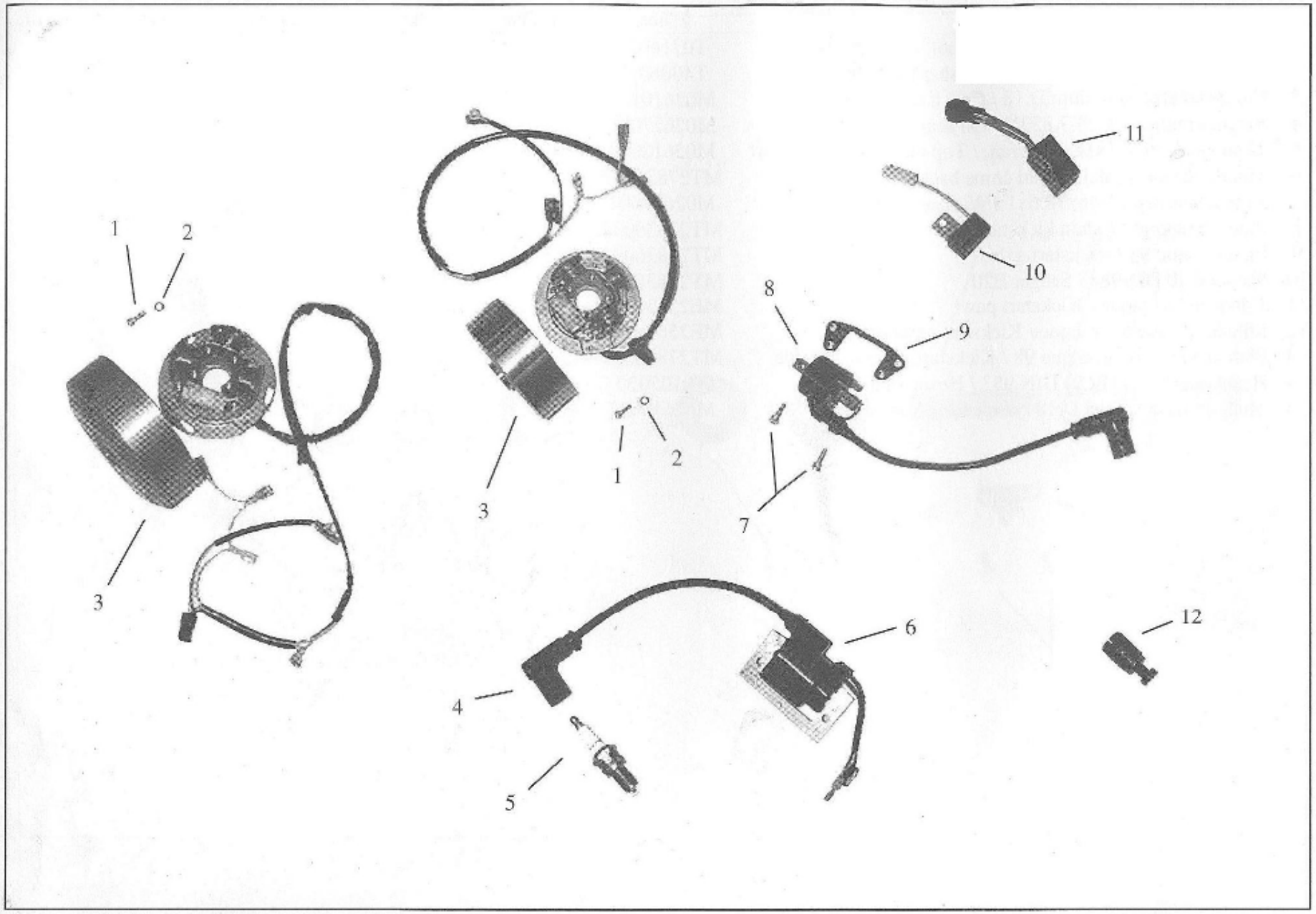
1
2
3
1
2
3
8
9
7
11
10
6
12
4
5

Nº	DESCRIPCION	270cc.	125cc.	200cc.	249cc.	321cc.	Cant.
1	Allen 5x15 8.8 / Screw, bolt allen	T0305015					3
2	Arandela 5x10x1 DIN 125 / Washer 5x10x1	T4005010					3
3	Volante encendido / Ignition comp.	M02810110	M02810120	M02810125	M02810110	M02810110	1
4	Pipa de bujía / Cap. Spark plug	BT27934000					1
5	Bujía NGK BPR5 ES/ Spark plug	M04012000					1
6	Bobina 270-321/ Ignition coil 270-321	MT27834006				MT27834006	1
7	Allen 6x14 / Screw, bolt allen		T0306014	T0306014	T0306014		2
8	Bobina 125-200-249/ Ignition coil 125-200-249		M02812110	M02812110	M02812110		1
9	Sop.bobina / Ignition coil support		BT20934026	BT20934026	BT20934026		1
10	Regulador alternador 415 C / Alternator regulator	L300031					1
11	CDI / CDI	M02812103					1
12	Extractor volante magnético / Extractor ignition mag.	M04015001					1

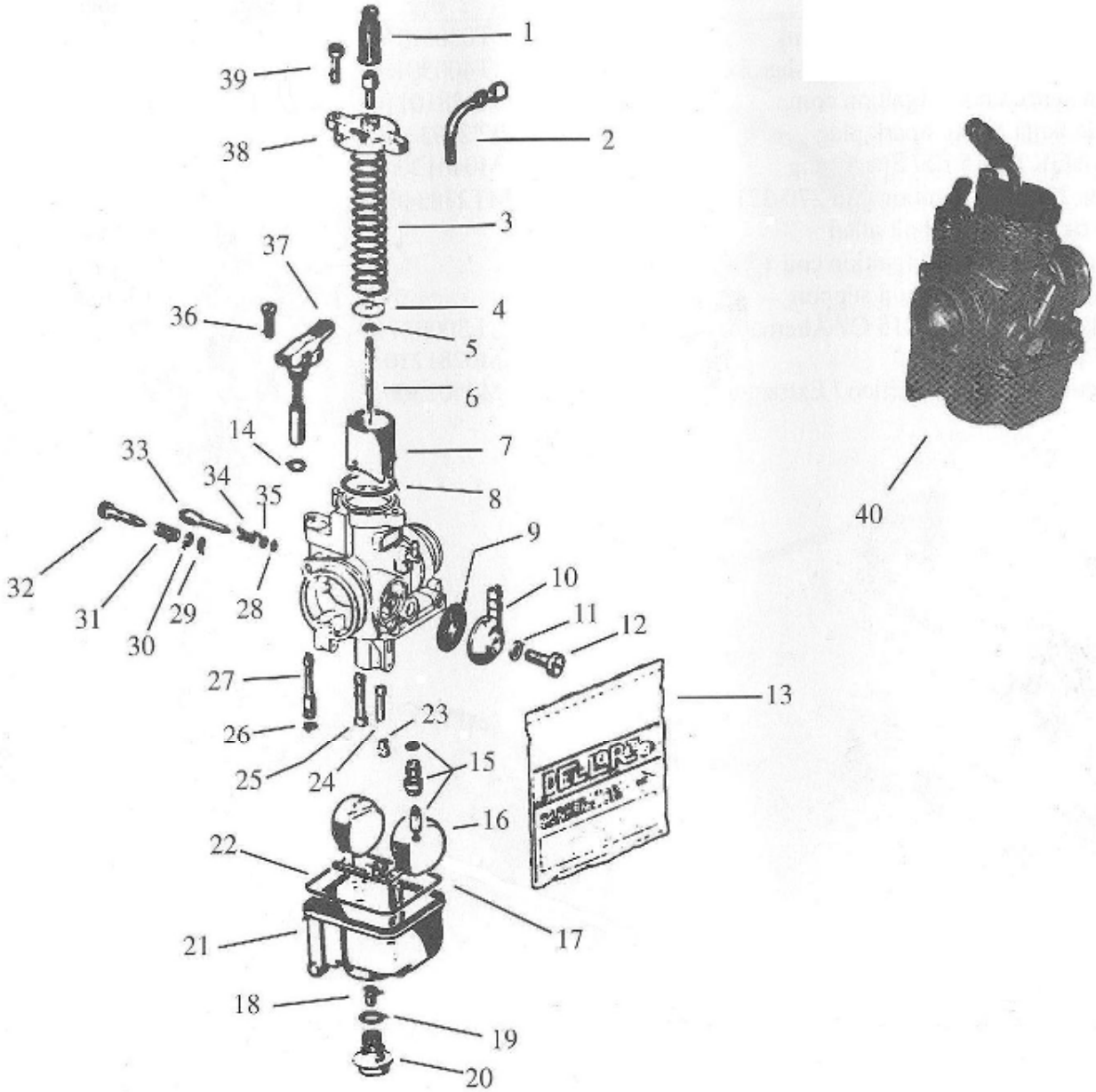
1
39
38
2
3
37
36
4
5
6
14
7
33
34
35
8
9
32
10
31
29
28
11
12
30
27
13
26
23
25
24
15
16
22
17
21
18
19
20
40

Nº	DESCRIPCION	270cc.	125cc.	200cc.	249cc.	321cc.	Cant.
1	Capuchón tensor cable gas / Adjuster tension cable gas	M09001055					1
2	Tensor cable gas / Tensioner cable gas	M09001032					1
3	Muelle compuerta / Spring slide, valve	M09001015					1
4	Plancha sujeción cable gas / Plate subjection	M09001010					1
5	Clip aguja / Clip. needle	M09001020					1
6	Aguja D36 3º punto / Needle D36	**M09003036**				M09003118	1
7	Compuerta D-60 / Slide, valve D-60	M09002060				M09002045	1
8	Tórica tapa carburador / O'ring cover carburettor	M09001050					1
9	Junta pipeta gasolina / Pipette sela fuel	M09001095					1
10	Pipeta entrada gasolina / Pipette entry fuel	M09001135					1
11	Junta tornillo pipeta / Gasket screw, bolt pipette	M09001100					1
12	Tornillo pipeta / Screw,bolt pipette	M09001140					1
13	Kit juntas carburador / Kit gasket carburettor	M09001101					1
14	Tóricas starter / O'rings starter	M09001065					1
15	Válvula flotador / Float valve	**M09001200**					1
16	Flotador 2x2, 8gr. / Float 2x2, 8gr. **WEIGHT 2.8 gr. (NEW)**	M09008028					2
17	Eje flotador / Float axle	M09001145					1
18	Chicle principal 118 / Main jet	M09006118	M09006122			M09006120	1
19	Tórica tapón cubeta / O'ring cover dish	M09001090					1
20	Tapón cubeta gasolina / Cover dish fuel	M09001155					1
21	Cubeta gasolina / Fuel dish	M09001150					1
22	Tórica cubeta gasolina / O'ring fuel dish	M09001085					1
23	Chicle ralentí 30 / Jet, slow 30	M09004030					1
24	Chicle ralentí 50 / Jet, slow 50					M09004050	1
25	Emulsor AQ 270 / Needle jet AQ 270	M09005270				M09005269	1
26	Tórica chicle starter / O'ring jet starter	M09001070					1
27	Chicle starter 60 / Jet starter 60	M09007060					1
28	Tórica tornillo regulador aire / O'ring screw, bolt reg. air	M09001075					1
29	Tórica torn. reg. Comp. / O'ring screw, bolt reg. Slide/valve	M09001060					1

Nº	DESCRIPCION	270cc.	125cc.	200cc.	249cc.	321cc.	Cant.
30	Arand. tornillo reg. Compt. / Washer screw reg. Slide,valve	M09001045					1
31	Muelle tornillo reg. Comp. / Spring screw,, bolt reg. slide	M09001040					1
32	Tornillo regulador compuerta / Screw, bolt reg. slide	M09001035					1
33	Tornillo reg. Entrada aire / Screw, bolt reg.entrance	M09001115					1
34	Muelle tornillo regulador aire / Spring screw, bolt reg. air	M09001120					1
35	Arandela torn. Reg. Aire / Washer screw,bolt reg. air	M09001125					1
36	Tornillo sujeción starter / Screw, bolt subjection starter	M09001110					1
37	Mando starter / Control starter	M09001105					1
38	Tapa carburador / Cover carburettor	M09001156					1
39	Tornillo tapa carburador / Screw, bolt cover carburettor	M09001025					2
40	Carburador PHBL 26 / Carburettor PHBL 26	M09000203	MT20990000	MT20990000	MT25990000	M09000203	1

KOKUSAN SYSTEM

(SYSTEMA ELECTRONICO KOKUSAN)

APPLICATION: GASGAS

MODEL 1996, 1997, 1998, 1999, 2000

GASGAS

Rising Sun Imports Inc.

United States of America

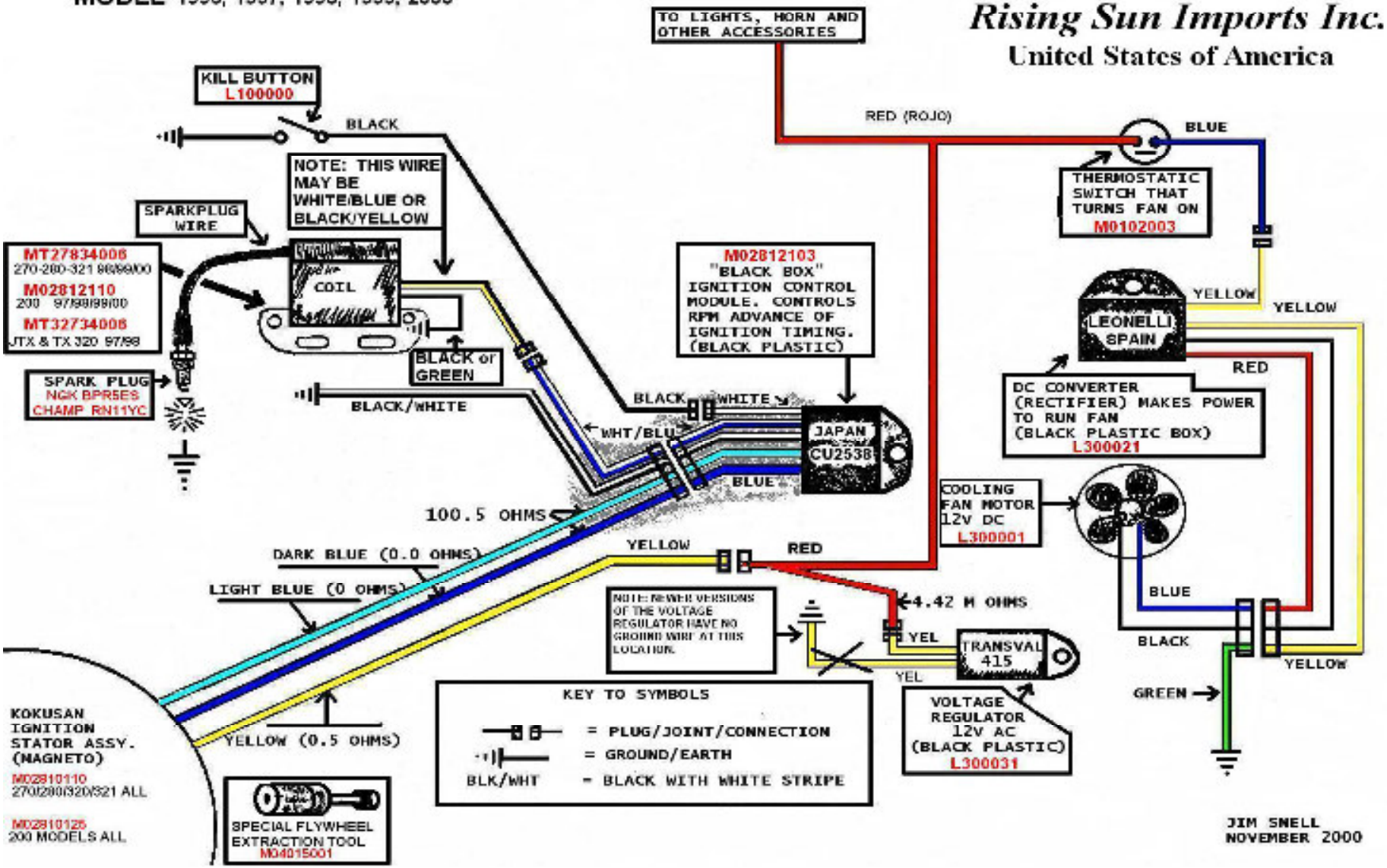

CARBURETOR SETTINGS USA

1998 TX 250 - TX 270 - TX320

WITH PHBL26 (26mm) SEA LEVEL TO 3,000 FEET
MAIN: 114
PILOT: 36 (38 OK)
NEEDLE: D36 (2nd CLIP POSITION DOWN FROM TOP)
FUEL SCREW: 3.5 TURNS OUT
FLOAT HEIGHT: ARMS IN LEVEL PLANE WITH FLOAT BOWL BASE (PARALLEL)

KEIHIN PWKGG28 (28mm) CARBURETOR SPECS:
MAIN: 118 (120, 122, 125 OK)
PILOT: 48 (45 OK)
NEEDLE: CENTER POSITION OF FIVE. (THIRD DOWN FROM TOP)
SLIDE: 35
AIR SCREW: 1.5 TURNS OUT (NOTE: THIS IS AN AIR SCREW)

NEEDLE: X17 (TOP CLIP POSITION)
SLIDE: 70