GAS GAS

1999 TXT

DIGITAL CONVERSION
RISING SUN IMPORTS INC
UNITED STATES of AMERICA
OCTOBER 2010

DESPIECE
PART LIST

TRIAL ' 99

125 c.c.
200 c.c.
249 c.c.
270 c.c.
321 c.c.

TRIAL-99 -1-

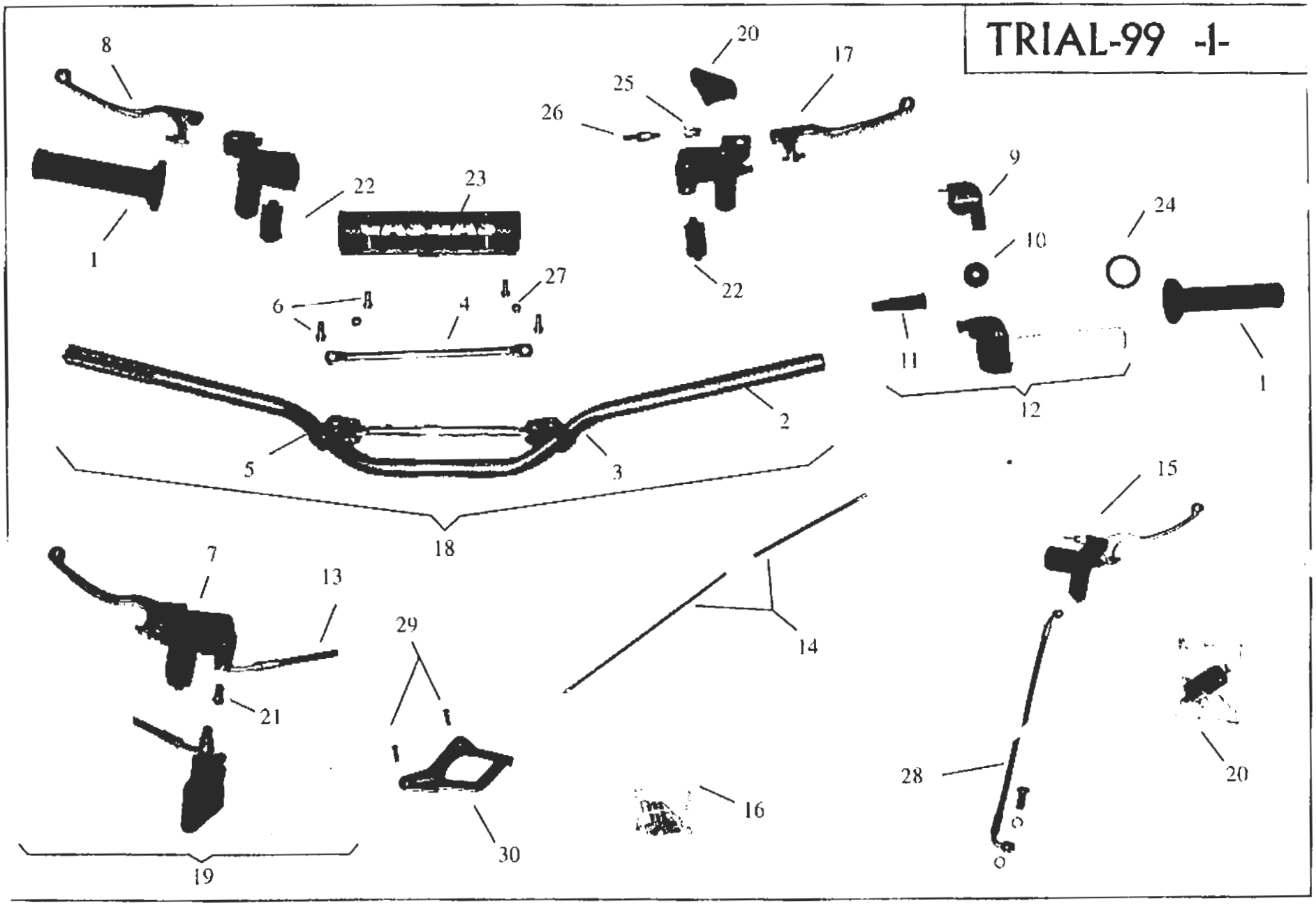
8
1
22
23
20
25
26
17
22
9
10
24
11
1
12
6
4
27
2
5
3
18
7
13
21
19
29
30
14
16
15
28
20

Nº	DESCRIPCION	270cc.	125cc.	200cc.	249cc.	321cc.	Cant.
1	Jgo. Empuñaduras / Handlebar grip (pair)	BT27936002					1
2	Manillar / Handlebar assy	BT27724001					1
3	Soporte barra subj. manillar drcho/Clamp crossbrace H/bar R.	BT27924015					1
4	Barra suj. manillar / Crossbrace handlebars	B650003					1
5	Soporte barra subj. manillar izq. / Clamp crossbrace H/bar left	BT27924016					1
6	Allen 6x25 ta. Emb. Cart. Susp. / Screw/bolt allen 6x25	TO306025					4
7	Bomba embrague hidraulico / Clutch M/CYL	BT27922009					1
8	Maneta embrague hidraulica 99 / Lever clutch short	E200701					1
9	Tapa mando gas / Cover twist grip	E140000					1
10	Rodillo mando gas / Roller twist grip	E119000					1
11	Guardapolvo puño gas / Dust cover throttle cable	G600000					1
12	Puño mando gas 1676-03 / Cpt. Twist grip 1676-03	E100001					1
13	Latiguillo embrague negro / Clutch tube black	BT27722003					1
14	Cable de gas / Cable throttle 994-96	BT27924008					1
15	Bomba freno delan. Con inter. / Front brake M/CYL	BT27922008					1
16	Kit bomba freno del. y embrague 99 / Kit repair front brake	BT27722208					1
17	Maneta freno delantero 99 / Lever brake short 99	R390002PL					1
18	Cto. Manillar 99 compl. T= 82 cm. / Cpt. Pipe steering handle	BT27724001C					1
19	Cto. Embrague negro trial 99 / Cpt. clutch M/CYL caliper tube	BT27922005					1
20	Kit tapa bomb. freno y emb./Kit cover, pump brake, and clutch	BT27722210					1
21	Torn. Esp. Suj. Latiguillo a bomba AJP / Screw support preasure pipe	BT27722212					1
22	Brida bomba negra AJP / Clamp M/CYL black	BT27722211					1
23	Protector manillar trial / Trial handlebars protector	BT27824004					1
24	Arandela mando gas / Twist grip washer	BT27922078					1
25	Casquillo pulsador freno del. / Front push button brake bushing	BT27922079					1
26	Pulsador freno del. / Front push button brake	L300066					1
27	Casquillo fijación soporte barra / Clamp crossbrace bushing	BT27924011					2
28	Latiguillo freno del. negro / Front brake tube black	BT27922002					1
29	ULS 5x16 / Screw, bolt ULS 5x16	T0505016					2
30	Protector piñon salida / Output pinion protector	MT27936021					1

TRIAL-99 -2-

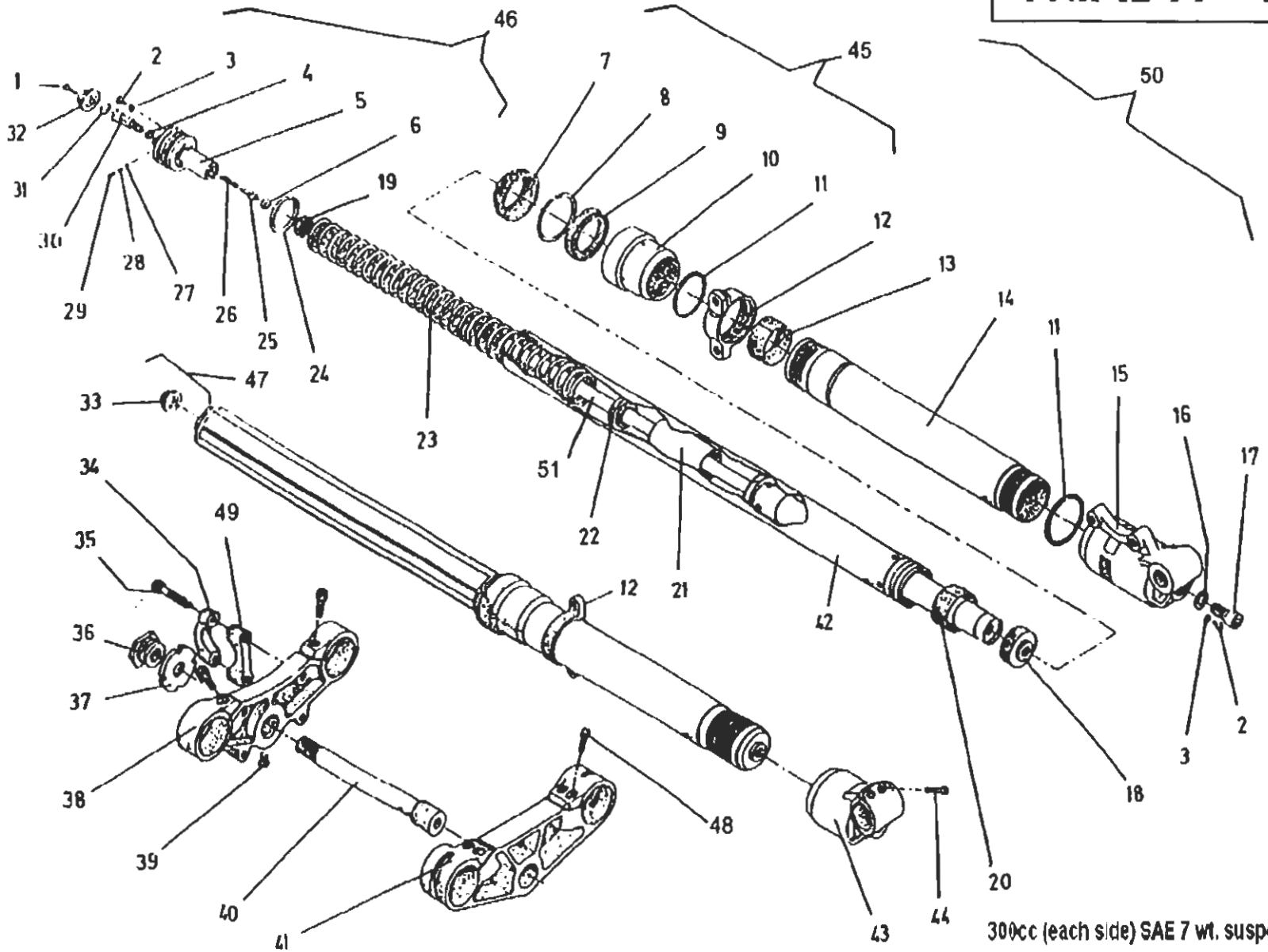
1
2
3
4
5
6
7
8
9
10
11
12
13
14
15
16
17
18
19
20
21
22
23
24
25
26
27
28
29
30
31
32
33
34
35
36
37
38
39
40
41
42
43
44
45
46
47
48
49
50
51
12
11
2
3
300cc (each side) SAE 7 wt. suspension oil

Nº	DESCRIPCION	270cc.	125cc.	200cc.	249cc.	321cc.	Cant.
1	Torn. Conico 3x12 DIN 7991/ Screw allen	ST950902					2
2	Tornillo DIN 7985 M3x0.5 / Screw bolt DIN 7985 M3x0.5	T0610305					4
3	Torica torn. Aire 2.75x1.60 / Washer oil drain	ST950200					4
4	Junta torica valv. 3.68x1.80 / O'ring seal 3.68x1.80	ST950202					2
5	Tapon barra suspension / Top front fork	BT27914105					2
6	Tope muelle regulador / Washer adjuster	ST950506					2
7	Rascador 48 trial-99 / Dust seal 48 trial-99	ST950219A					2
8	Seeger DE 48 / Retainer seal DE 48	ST950713					2
9	Reten 38x48x10 / Fork seal 38x48x10	ST950220					2
10	Tubo portareten de 48 / Fork seal holder 48	BT27914114					2
11	Torica porta reten 44. 2x3 / O'ring front fork	ST950214					4
12	Brida soporte guardabarro / Support front fork to fender	BT27914150					2
13	Glacier botella susp. 38x41x20 / Glacier bush top 38x41x20	ST950408					2
14	Tubo botella susp. Cromada / Tube outer front fork	ST950406					2
15	Puntera botella izrda. Larga / Base front fork left hand	BT27914143					1
16	Arand. Goma interior / Washer seal front fork	ST950208					2
17	Allen 10x25 DIN 912 / Allen 10x25 DIN 92	TO310025					2
18	Centraje tubo hidra. / Spacer bush	ST950522					2
19	Tuerca fijacion reg. Hidra. / Nut regulator	ST950507					2
20	Glacier susp. 37x39x20 / Glacier bush 37x39x20	ST950212					2
21	Precarga plastico / Spring pre load plastic	ST950203					2
22	Casq. Cent. F6-20x24,9x24x9x33 / Spacer front fork	ST950217					2
23	Muelle suspension / Spring front fork	ST950703					2
24	Torica tapon susp. 32.5x2 / O'ring plug front fork 32.5x2	ST950216					2
25	Piston regulacion hidra. / Piston regulator hydraulic	ST950505					2
26	Muelle presion hidraulico / Spring precision hydraulic	ST950702					2
27	Bola marcaje hidraulico D.03 / Ball locating adjuster	ST950201					2
28	Muelle graduacion hidra. / Spring adjuster hydraulic	ST950700					2
29	Esparrago marc. Hidra, DIN916KN 4x4 / Pin locating	ST950904					2
30	Cuerpo valvula regulador / Valve regulator hydraulic	ST950504					2
31	Anillo tope regulador / Seal top adjuster	ST950701					2
32	Regulador hidraulico compr. / Adjuster top compresion	ST950501					1

Nº	DESCRIPCION	270cc.	125cc.	200cc.	249cc.	321cc.	Cant.
33	Regulador hidraulico ext. / Adjuster top return	ST950502					1
34	Brida soporte manillar / Support handlerbar clamp	BT27914012					2
35	Allen 8x50 / Screw bolt allen M8x50	T0308050					4
36	Tapon platina superior / Nut top steering axle	ST950523					1
37	Tuerca direccion / Nut under top clamp	BT27910029					1
38	Platina superior / Clamp triple top (yoke)	ST950300					1
39	Uls 6x12 tope fren, pro.fil, / Screw bolt Uls 6x12	T0506012					1
40	Eje direccion / Axle steering	ST950400					1
41	Platina inferior / Clamp triple lower (yoke)	ST950800					1
42	Barra suspens. Crom. / Tube bar suspension chrome	ST950415TI	ST950415	ST950415	ST950415	ST950415	2
43	Puntera botella dreha.corta / Base right fork	BT27914142					1
44	Allen especial 6x25 UFK. susp / Allen special 6x25	T0316025					2
45	Cto. Porta reten 95 / Cpt. Seal holder inc seal	S950102					2
46	Cto. Tapon regul. Comp. / Cpt. Adju. comp.compres	S950103					1
47	Cto. Tapon regul. Extens. / Cpt. Adju. Comp. return	S950104					1
48	Allen 8x30. Culata / Screw bolt allen 8x30	T0308030					6
49	Brida inferior manillar / Clamp handlebar lower.	BT27914013					2
50	Cto. Susp. Crom. trial 99 / Cpt. Suspension chrome	BT27914000	BT25914000	BT25914000	BT25914000	BT27914000	1
51	Eje amortiguador comp. / Axle shock absorber comp.	ST950509					1

Fork oil volume 300cc (each leg, completely drained)
7wt. Fork Oil

TRIAL-99 -3-

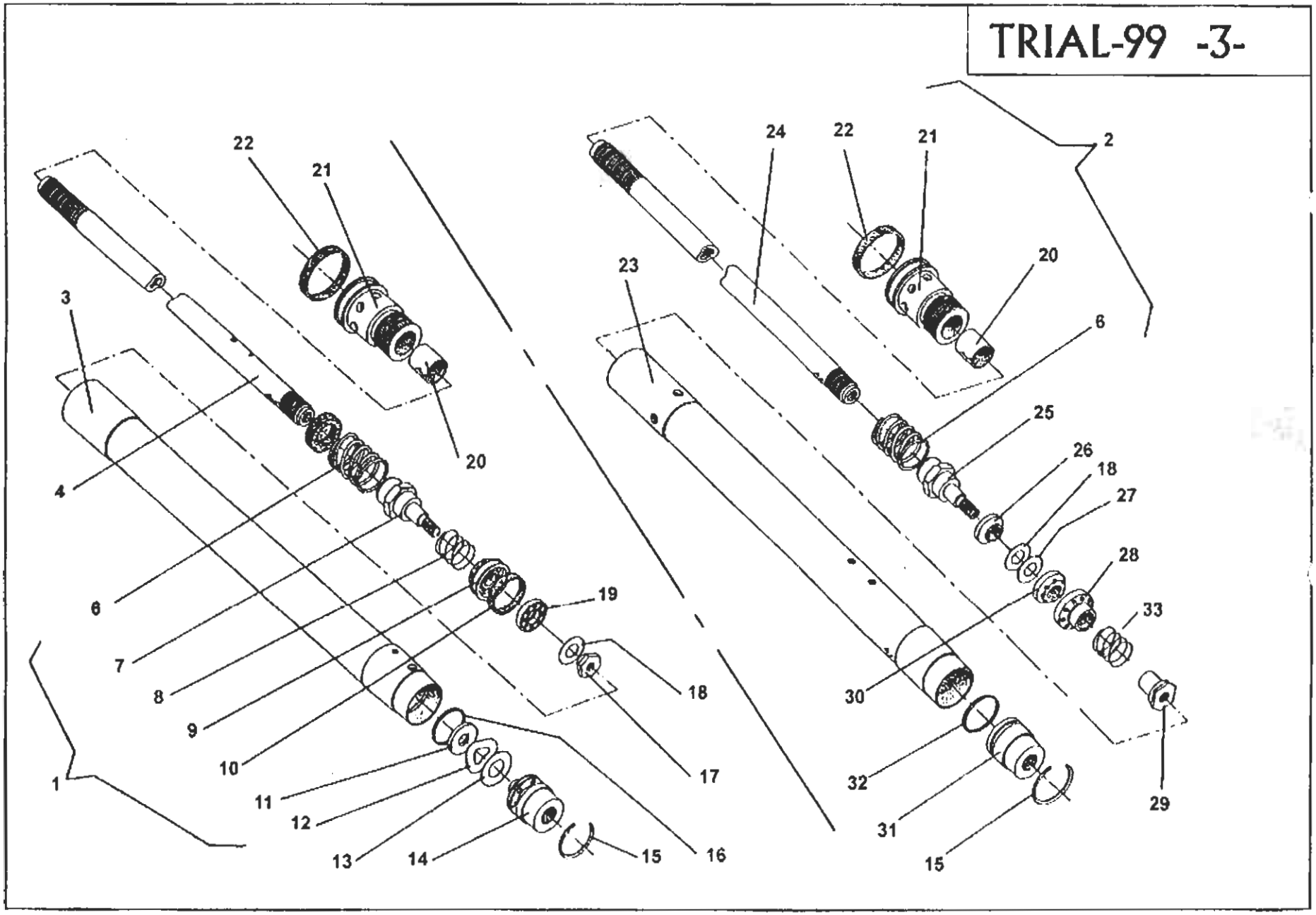
22
21
3
20
4
6
7
8
9
10
19
18
17
11
12
13
14
15
16
1
24
22
21
2
20
23
6
25
26
18
27
28
33
30
32
31
15
29

Nº	DESCRIPCION	270cc.	125cc.	200cc.	249cc.	321cc.	Cant.
1	Cto.hidraulico extensión / Comp.Hydraulic damper return	S950100					1
2	Cto. hidraulico compresión/ Comp.hydraulic damper compress	S950101					1
3	Tubo deposito hidráulico ext. / Tube hydraulic damper return	BT27914124					1
4	Eje amortiguador extensión / Damper rod return	BT27914116					1
6	Muelle tope retorno / Spring top out return	ST950714					2
7	Eje portavalvulas ext. D.2 / Valve assy return	ST950512					1
8	Muelle cierra valvulas 15x15x0.5/ Spring valve control	BT27914147					2
9	Regul.abertura hidra. Extensión / Control valve return	ST950517					1
10	Aro nylon guía P.F1-20.4x22.4 / Nylon seal damper rod	ST950205					1
11	Arandela tapón hidra.exten 2.5 / Washer valve return	ST950710					1
12	Arandela regla. 013x20x0.1 / Washer shim	ST950709					1
13	Aran. 010.2x20x0.2 reglaje / Washer valve regulator	ST950708					1
14	Tapón hidra.exten. / End cap damper assy	ST950521					1
15	Clip tapón hidráulico / Clip damper	ST950711					2
16	Junta Torica 20x1 / O'ring damper	ST950207					1
17	Tornillo tope arandela exten. / Nut damper rod return	ST950519					1
18	Arandela reglaje 08,1x17x0,1 / Washer shim damper	ST950704					2
19	Válvula extensión / Valve assy, return	ST950518					1
20	Glacier 1215P10 ped.freno-sus. / Glacier bush	ST950210					2
21	Tapón tubo hidráulico / Top valve	ST950510					2
22	Aro nylon tapón F1-29x33.3x5 / Seal piston nylon	ST950204					2
23	Tubo deposito hidra.compres. / Tube damper assy	ST950403					1
24	Eje amortiguador compresión / Rod damper compresion	BT27914117					1
25	Eje portavalvulas comp. / Valve assy, compresion	ST950511					1
26	Tope cierre válvula compre. / Top valve assy compresion	ST950513					1
27	Arandela reglaje 08,1x17x0,2 / Washer valve	ST950705					1
28	Válvula paso hidra. Compres. / Valve compresion	ST950515					1
29	Tuerca fijación hidra. Compre. / Nut valve assy compresion	ST950516					1
30	Válvula compresión / Valve compresion	ST950514					1
31	Tapón hidráulico compresión / Top valve compresion	ST950520					1
32	Torica 1.78NB-18 77x1.78 / O-ring	ST950206					1
33	Muelle cierre válvula 14x15x1 / Valve close spring	ST950707					1

TRIAL-99 -4-

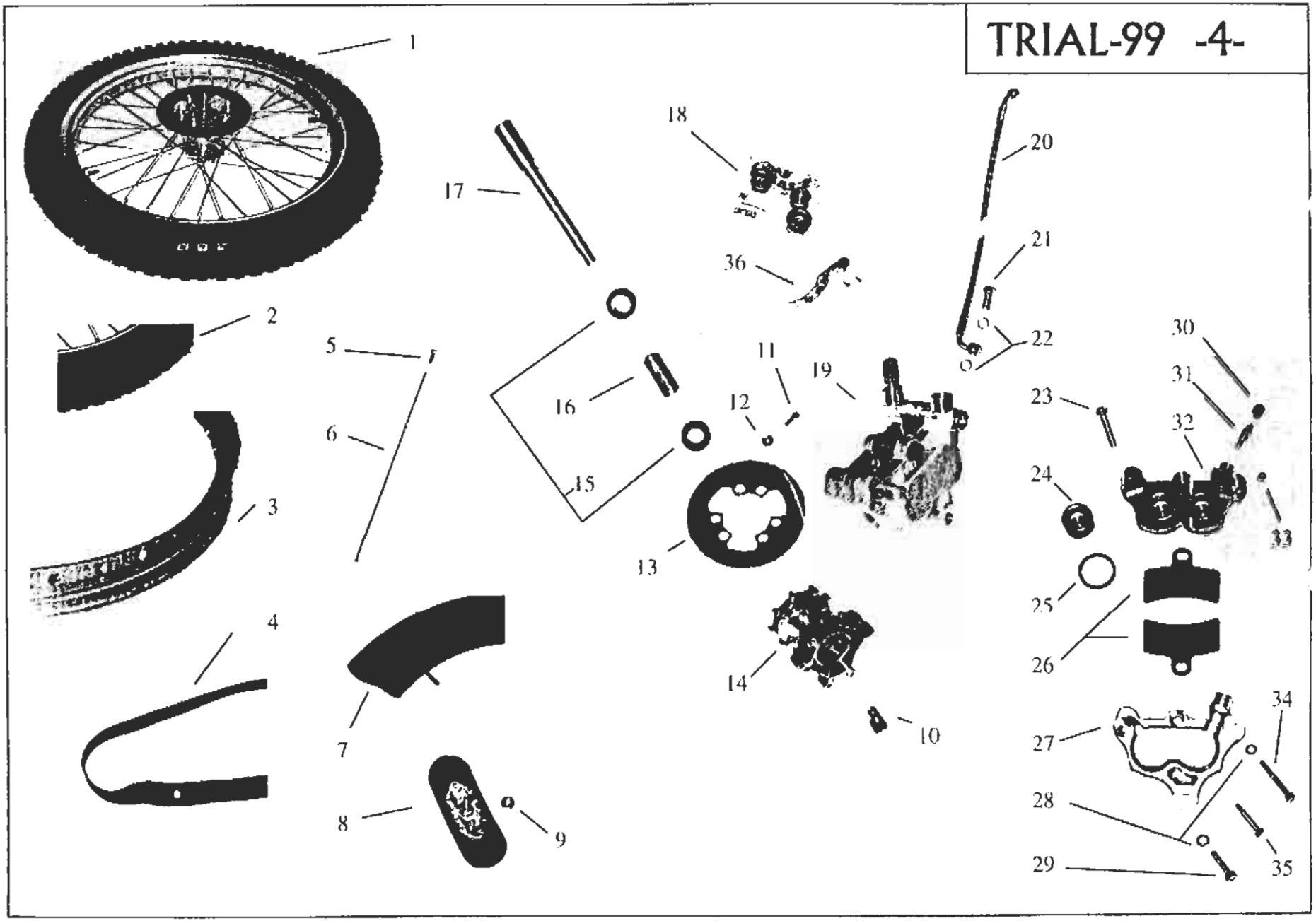
1
2
3
4
5
6
7
8
9
10
11
12
13
14
15
16
17
18
19
20
21
22
23
24
25
26
27
28
29
30
31
32
33
34
35
36

Nº	DESCRIPCION	270cc.	125cc.	200cc.	249cc.	321cc.	Cant.
1	Cto. Rueda delatera 99 / Cpt. front wheel 99	BT27918000					1
2	Cubierta delantera 2,75x21 / Tyre, front	N140000					1
3	Llanta delantera trial 99 / Rim front trial 99	BT27718006					1
4	Goma protectora neumático 2,75x21 / Flap tyre	N100000					1
5	Tuerca radios 3mm. D.6 rueda del. / Nut spoke front wheel	BT27718001					36
6	Radios 247x3 rueda delantera / Spoke front wheel	BT27718009					36
7	Cámara delantera 2,75x21 / Tube front	N120000					1
8	Agarre cubierta N1=BE25618027 / Clamp tyre	R120000					1
9	Tuerca con arandela M8 / Flange nut M8	T2208000					6
10	Distanciador rueda delantera 99 / Front wheel spacer 99	BT27718018					1
11	Hexagonal M8 con aran. disco del. / Hexa. screw disc front	T0206020					6
12	Distanciador flotante 18x15. 2x6 / Distance-Spacer special	BT27718019					1
13	Disco freno delantero 185 / Brake disk front	BT27922011					1
14	Buje rueda delantera trial 99 / Hub rear trial 99	BT27718007					1
15	Cojinete 6004 2RSR / Bearing	C160001					2
16	Casquillo int. Buje delantero / Spacer, int. Hub front	BT27718051					1
17	Eje rueda delantera / Axle front wheel	R550103					1
18	Kit pinza freno del. y tras. 99 / Kit rear and front caliper 99	BT27922201					1
19	Cto. Pinza delantera / Cpt. front caliper	BT27922000					1
20	Latiguillo freno del. negro / Front brake tube black	BT27922002					1
21	Tornillo lat. bomb. freno del./ Screw-bolt pressure hose	R320000					1
22	Arandela 10x14x1 / Washer	BT27922072					2
23	Tornillo allen 8x35 / Allen screw	TO318035					1
24	Pistón freno / Brake piston	BT27922069					4
25	Toricas (goma pinza líquido freno) / Seal	BT27922052					4
26	Pastilla freno / Brake pad	BT27922065					2
27	Semi pinza del. con soporte / Semi caliper front with support	BT27922066					1
28	Arandela 8x16x1,5 / Washer	T4008016					2
29	Allen 8x35 cubredisco / Allen disk cover	TO308035					1
30	Tapón sangrador / plug bleeder	BT27922055					1
31	Sangrador / Screw bleeder	BT27922060					1
32	Semi pinza del. interior / Semi caliper front interior	BT27922067					1

Nº	DESCRIPCION	270cc.	125cc.	200cc.	249cc.	321cc.	Cant.
33	Torica pequeña D.3x1,5 EPDM / Small seal	BT27922074					1
34	Allen 8x60 / Allen 8x60	T0308060					1
35	Tornillo umbraco UPS / Screw umbraco UPS	BT27922006					1
36	Tapa plástico pastilla freno / Plastic cover brake pad	BT27920028					1

TRIAL-99 -5-

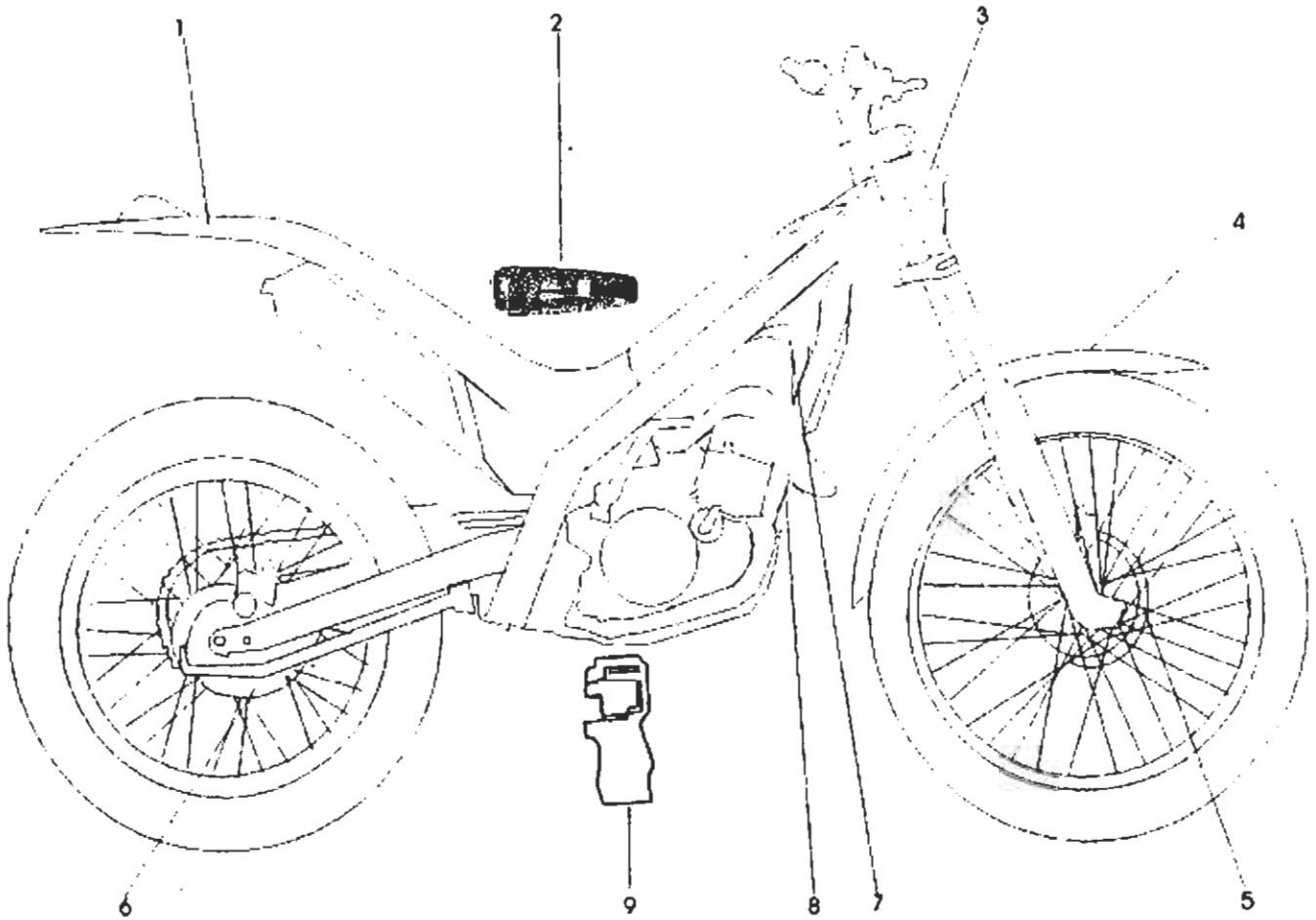

Nº	DESCRIPCION	270cc.	125cc.	200cc.	249cc.	321cc.	Cant.
1	Guardabarro trassero trial / Fender rear trial	BT27920007	BT20920007	BT20920007	BT27920007	BT32920007	1
2	Sillin trial-99 / Seat trial-99	BT27910015	BT20910015	BT20910015	BT27910015	BT27910015	1
3	Cto. Faro-99 / Cpt.light assy	BT27920120	BT20920020	BT20920020	BT27920120	BT32920120	1
4	Guardabarro del. / Fender front trial	BT27920006	BT20920006	BT20920006	BT27920006	BT32920006	1
5	Protector disco freno del. / Protector disk front	BT27920045	BT20920045	BT20920045	BT27920045	BT32920045	1
6	Protector disco tras. / Protector disk rear	BT27928012	BT27928012	BT27928012	BT27928012	BT27928012	1
7	Tapa lateral dreh. 99 / Cover side right	BT27820012	BT20820012	BT20820012	BT27820012	BT20820012	1
8	Tapa lateral izq. 99 / Cover side left	BT27820013	BT20920013	BT20920013	BT27820013	BT20920013	1
9	Protector suspensión / Protector suspension	BT27820008					1

TRIAL-99 -6-

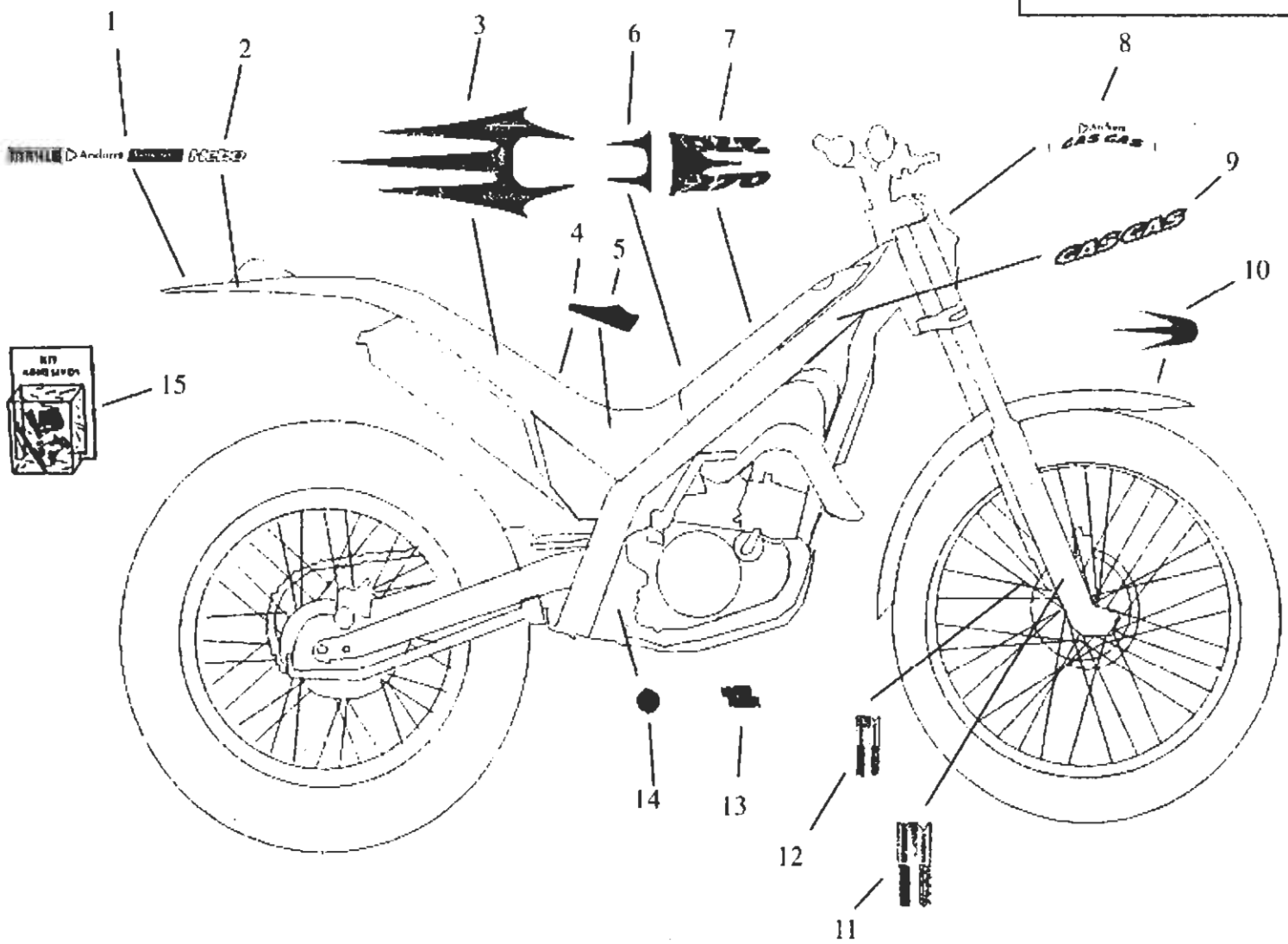

Nº	DESCRIPCION	270cc.	125cc.	200cc.	249cc.	321cc.	Cant.
1	Adhe. Sponsor drch. / Sponsor right decal	BT27938035					1
2	Adhe. Sponsor izq. / Sponsor left decal	BT27938036					1
3	Adhe. Guardabarros tras. / Rear fender decal	BT27938032	BT12938032	BT12938032	BT27938032	BT27938032	1
4	Adhe. Guardabarros Lat. izq. / Side L. fender decal	BT27938031					1
5	Adhe. Guardabarros Lat. drch. / Side R fender decal	BT27938030					1
6	Adhe. trasero / Rear decal	BT27938034					1
7	Adhe. Depósito / Decal tank	BT27938022	BT12938022	BT20938022	BT25938022	BT32938022	1
8	Adhe. Portafaro / Case head light decal	BT27938001	BT20938001	BT20938001	BT27938001	BT27938001	1
9	Adhe. Chasis / Frame body decal	BT27938021					2
10	Adhe. Guardabarros del. / Front fender decal	BT27938027	BT12938027	BT12938027	BT27938027	BT27938027	1
11	Adhe. Horquilla drch. / Front right fork decal	BT27938043					1
12	Adhe. Horquilla izq. / Front left fork decal	BT27938042					1
13	Adhe. Tapa volante / Cover genrator decal	PU00638011	BT20938056	BT20938056	PU00638011	BT32938056	1
14	Tapón basculante / Plug swinging arm	G230000					1
15	Conjunto adhe. / Cpt. decal	BT27938000	BT12938000	BT20938000	BT25938000	BT32938000	1

TRIAL-99 -7-

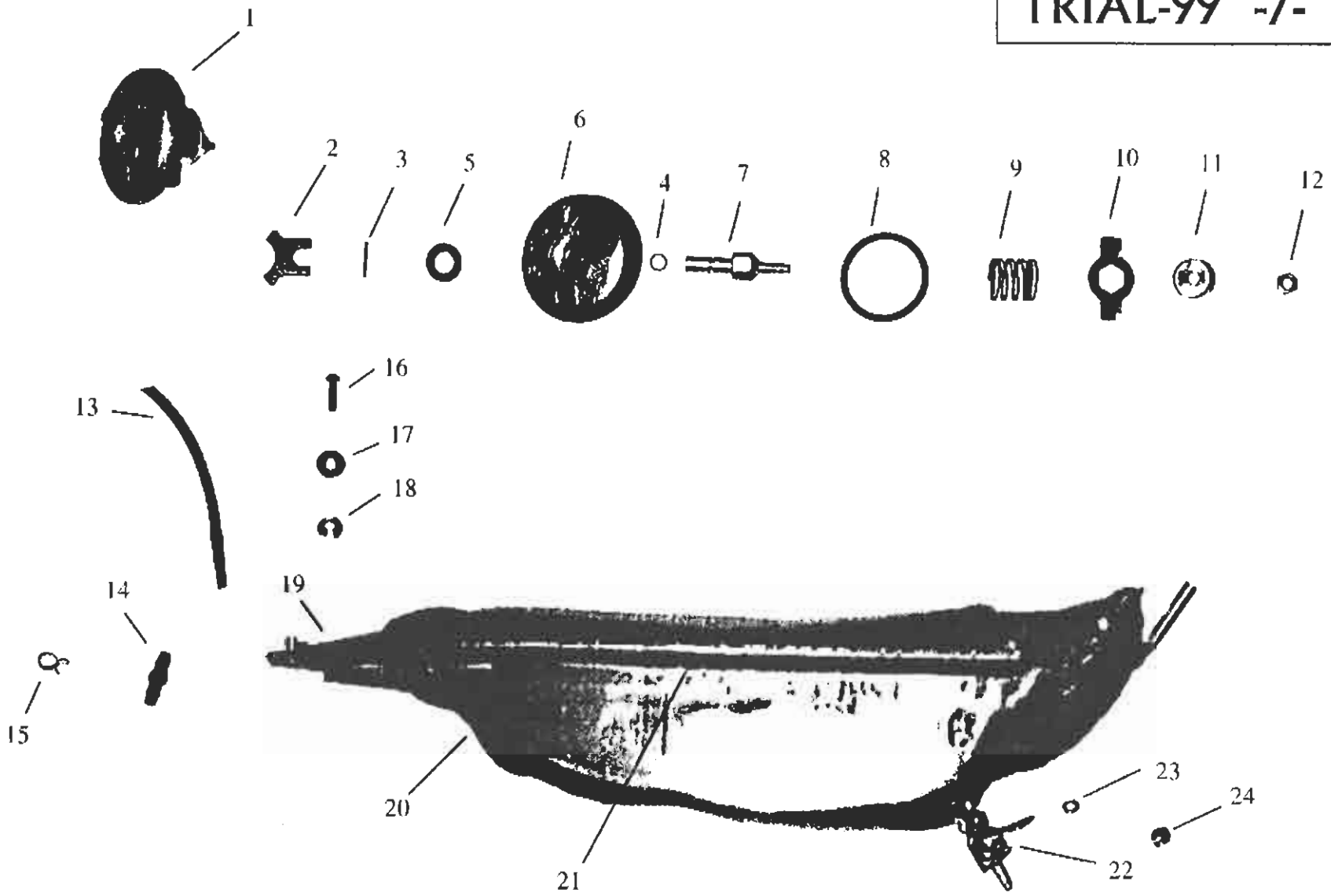

Nº	DESCRIPCION	270cc.	125cc.	200cc.	249cc.	321cc.	Cant.
1	Cto. Tapón gasolina / Cpt. Plug. fuel-petrol	BT27920010					1
2	Cierre tapón depósito / Close plug tank	BT27810088					1
3	Pasador cierre tapón / Pin close plug	BT27710094					1
4	Torica eje tapón 5x1 / O'ring axle plug 5x1	BT27810098					1
5	Arandela antidesgaste cerradura / Washer unwear close	BT27710095					1
6	Cuerpo exte.tapon depósito / Ext. body plug tank	BT27910089					1
7	Eje tapón depósito / Axle plug tank	BT27910092					1
8	Torica cierre 29x3 / Close o-ring 29x3	BT27810097					1
9	Muelle tapón depósito / Spring plug tank	BT27910102					1
10	Bayoneta tapón depósito / Bayonet plug tank	BT27910101					1
11	Apretador Torica tapón depósito / O-ring press plug tank	BT27910090					1
12	Tuerca autoblocante M5 / Self-locking M5	T2105001					1
13	Tubo desva. Depos. 17cm =G470000 / Tub desvap. Tank	BT27810018					1
14	Válvula des. / Des. Valve	BT27836025					1
15	Abrazadera de muelle / Spring clevis	BT27710120					1
16	ULS 5x20 / ULS 5x20	T0505020					1
17	Arandela 6x18x1.5 (DIN 9021) / Washer plane 6x18x1,5	T4006018					1
18	Casquillo depósito / Bushing tank	B560040					1
19	Goma prot.latiguillo 4947 / Rubber prot. Pressure hose	G200000					1
20	Depósito trial 98 / Tank trial 98	BT27910024					1
21	Junta depósito xasis 40x10 / Gasket tank. chassis 40x10	BT27838018					2
22	Grifo gasolina c/90 / Tap fuel-petrol c/90	BT27810031					1
23	Arandela grifo depósito/ Washer tank tap	BT27910131					1
24	Tuerca grifo depósito / Nut tank tap	BT27910132					1

TRIAL -99 -8-

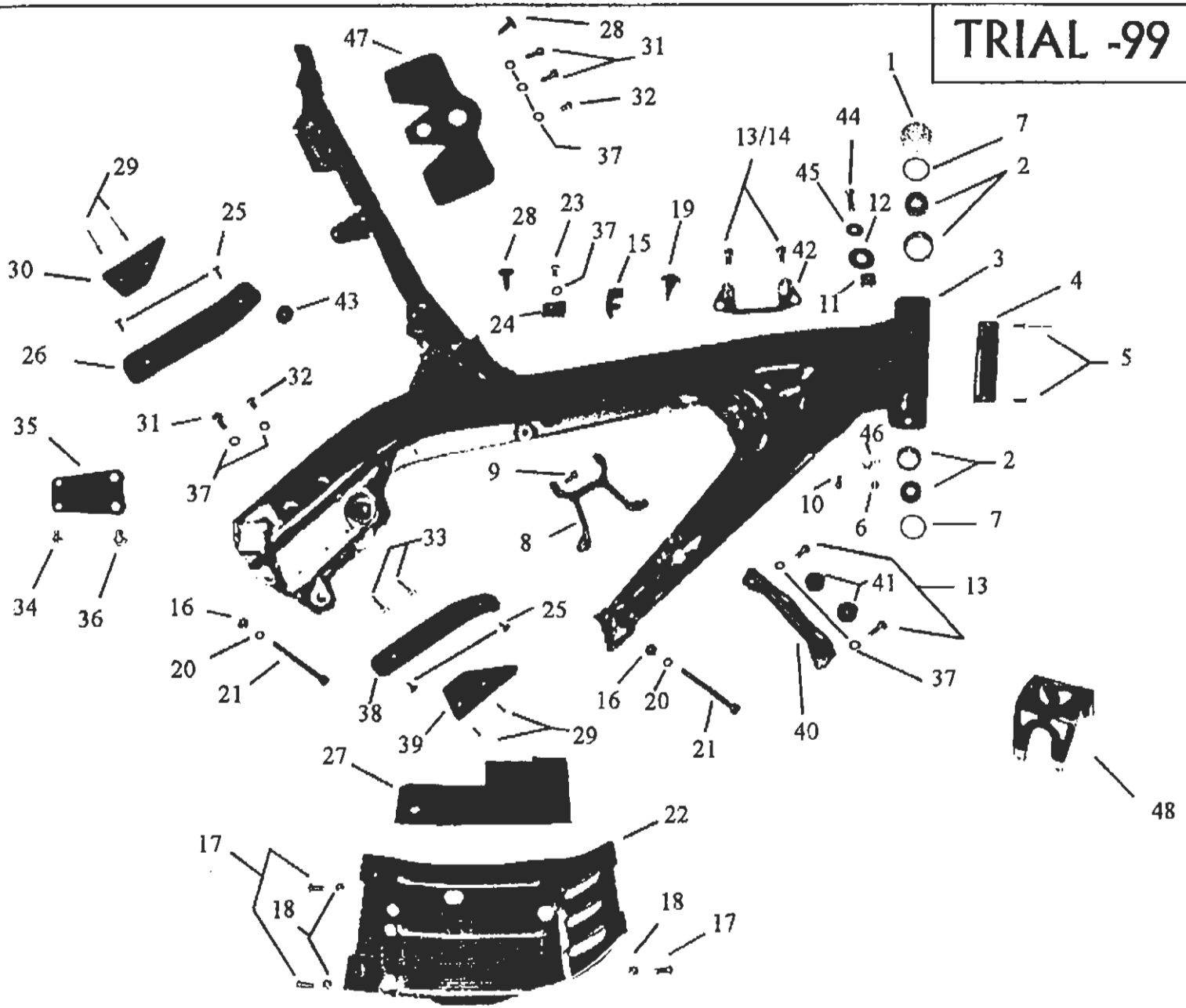
47
28
31
32
37
1
44
7
2
13/14
45
12
42
11
3
4
5
29
25
30
43
26
32
31
37
35
34
36
9
8
33
46
2
10
6
7
41
13
37
16
20
21
38
25
39
29
27
16
20
21
40
22
17
18
18
17
48

Nº	DESCRIPCION	270cc.	125cc.	200cc.	249cc.	321cc.	Cant.
1	Guardapolvo cojinetes dirección / Seal bearing steering	BT27710026					1
2	Cojinete dirección 30203 / Bearing steering head	C140100					2
3	Chasis central 99 / Frame body 99	BT27910000					1
4	Placa identificación / Vehical vin plate	BT27710060					1
5	Remache 3x6 alum.09101638 / Rivet 3x6 alum.	T4503260					2
6	Tuerca con arandela M6 / Nut with washer M6	T2206000					1
7	Torica dirección / O'ring direcc. 34,59x2,62	C300100					2
8	Tirante cilindro / Brace cylinder	BT27710050			BT27710050	BT27710050	1
9	Allen 8x16 / Screw, bolt allen 8x16	T0308016					2
10	Allen Reg. Int. Luz 6x16 / Scew, bolt allen 6x16	T0306016					1
11	Tuerca enjaulada / Cage nut	T2005010					1
12	Arandela reglaje / Regulate washer	T4001626			T4001626	T4001626	1
13	Allen 6x12 / Screw, bolt allen 6x12	T0306012	T0306012	T0306012	T0306012	T0306012	6
14	Allen 6x20 /Screw , bolt allen 6x20	T0306020				T0306020	2
15	Goma protectora depósito / Bubber protector tank	BT27936026					2
16	Tuerca M10 autoblocante/ Nut M10 locknut	T2210000					2
17	ULS 8x20 / Screw, bolt ULS 8x20	T0508020					4
18	Tuerca autoblocante M8 / Nut locknut	T2108001					4
19	Goma caballete 5928 / Rubber side stand	G410000					2
20	Glober / Whaser glober	T4001015					2
21	Allen motor 10x100 / Motor screw, bolt allen	T0310100					2
22	Placa protección motor / Plate motor protection	BT27910005					1
23	ULS 6x12 / Screw, bolt ULS 6x12	T0506012					1
24	Tuerca nut 956 enjaulada M6 / Cage nut M6	T2606000					1
25	Tornillo chapa 4.2x13 / Screw plate	T259349					4
26	Prot. lat. chasis izq. / Protector frame body left	BT27720031					1
27	Goma protectora motor / Rubber protector motor	BT27936029					1
28	Philips 6x18 / Philips 6x18	T0706018					2
29	Remache 3x10 alu. Negro / Rivet 3x10 alum.black	T4503280					4
30	Prot. lat. chasis izq. pequ. / Prot. side, frame body left	BT27720036					1
31	Allen 6x14 / Screw, bolt allen 6x14	T0306014					3
32	ULS 6x10 / ULS 6x10	T0506010					2

Nº	DESCRIPCION	270cc.	125cc.	200cc.	249cc.	321cc.	Cant.
33	Allen con. 6x35 / Cone screw, bolt allen	T0406035					2
34	ULS 6x12 / ULS 6x12	T0506010					2
35	Tirante chasis carter 3mm. / Crankcase brace frame body	BT27910053					1
36	ULS 8x12 8.8 / ULS 8x12 8.8	T0508012					2
37	Arandela plana 6x12x1.5 (DIN 125) / Washer plane	T4006012					8
38	Prot. lat. chasis drch. / Prot. frame body right	BT27720030					1
39	Prot. lat. chasis drch. pequ. / Prot. side, frame body right	BT27720035					1
40	Tirante suj. lat. radiador / Brace subjec. Lat. radiator	BT27910058					1
41	Goma radiador / Rubbers radiator	G220000					2
42	Soporte bobina / Bobbin support		BT20934026	BT20934026	BT20934026		1
43	Goma protector latiguillo / Rubber prot. pressure hose	G200000					1
44	Allen 5x25 / Screw, bolt allen 5x25	T0305025					1
45	Arandela plana 6x16x1,5 / Washer plane	T4006016					1
46	Grapa F2 / Clamp F12	BT27710041					1
47	Goma tope depósito / Tank top rubber	BT27836024					1
48	Puente suspensión / Suspension bridge	BT27710055					1

TRIAL-99 -9-

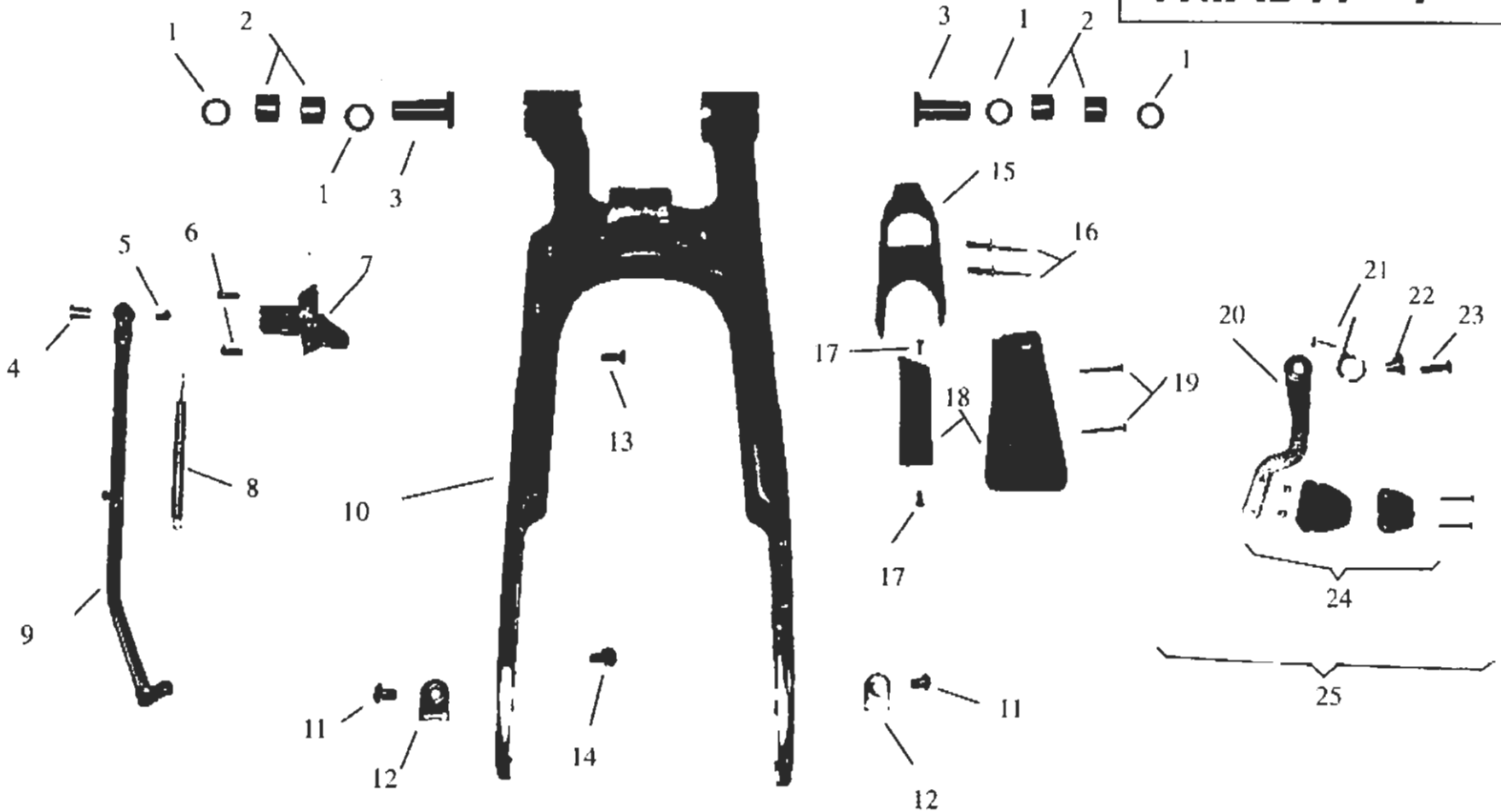
1
2
1
3
4
5
6
7
8
9
10
11
12
13
14
3
1
2
1
15
16
17
18
19
17
11
12
20
21
22
23
24
25

N°	DESCRIPCION	270cc.	125cc.	200cc.	249cc.	321cc.	Cant.
1	Reten 20-26-4 870 N Basc./ Oil seal 20-26-4	C220001					4
2	Cojinete agujas HK2020 / Beraing needles HK 2020	C100001					4
3	Casquillo basculante / Pivot, bush swinging arm	B220002					2
4	Casquillo guia caballete trial / Push, pivot side stand trial	BT27712011					1
5	Allen 6x16 bomba emb. / Allen 6x6 UFK cavll.	T0306016					1
6	ULS 8x20 / Screw,bolt ULS 8x20	T0508020					2
7	Sop. Caballete 97 / Side stand bracket	BT27712023					1
8	Muelle caballete / Spring side stand	M120000					1
9	Caballete trial 99 / Side stand bracket	BT27912010					1
10	Basculante / Swinging arm	BT27912002					1
11	ULS M8x10 / Screw, bolt ULS M8x10						2
12	Tope excéntrica s/basculante / Stop, cam adjuster swing/arm	R620050				R620051	2
13	Hexagonal 6x15 cavll. Basc. / Screw, bolt Hexa. 6x15	T0316015					1
14	Allen M8 x10 / Screw, bolt allen M8x10	T0308010					2
15	Guia cadena / Guide chain	G180002					1
16	Remache cab. Gran.14x14.8x21 / Rivet 14x14.8x21	T4505016					1
17	ULS 5x12 / Screw,bolt ULS 5x12	T0505012					2
18	Cubrecadenas 97 / Chain guard	BT27728011					1
19	Torn. Rosca chapa philips 4x38 / Screw, bolt philips 4x38	T0604038					2
20	Brazo tensor cadena / Tensioner chain arm	B520102					1
21	Muelle tensor cadena / Spring tensioner chain	M122000					1
22	Casquillo tensor cadena / Pivot, bush chain tensioner	B560000					1
23	Allen con. 8x30 tens. Cad. / Screw, bolt allen conic 8x30	T0408030					1
24	Goma tensor cadena / Rubber tensioner chain	G180010					1
25	Cto. Tensor cadena / Cpt. chain tensioner	B520101					1

TRIAL-99 -10-

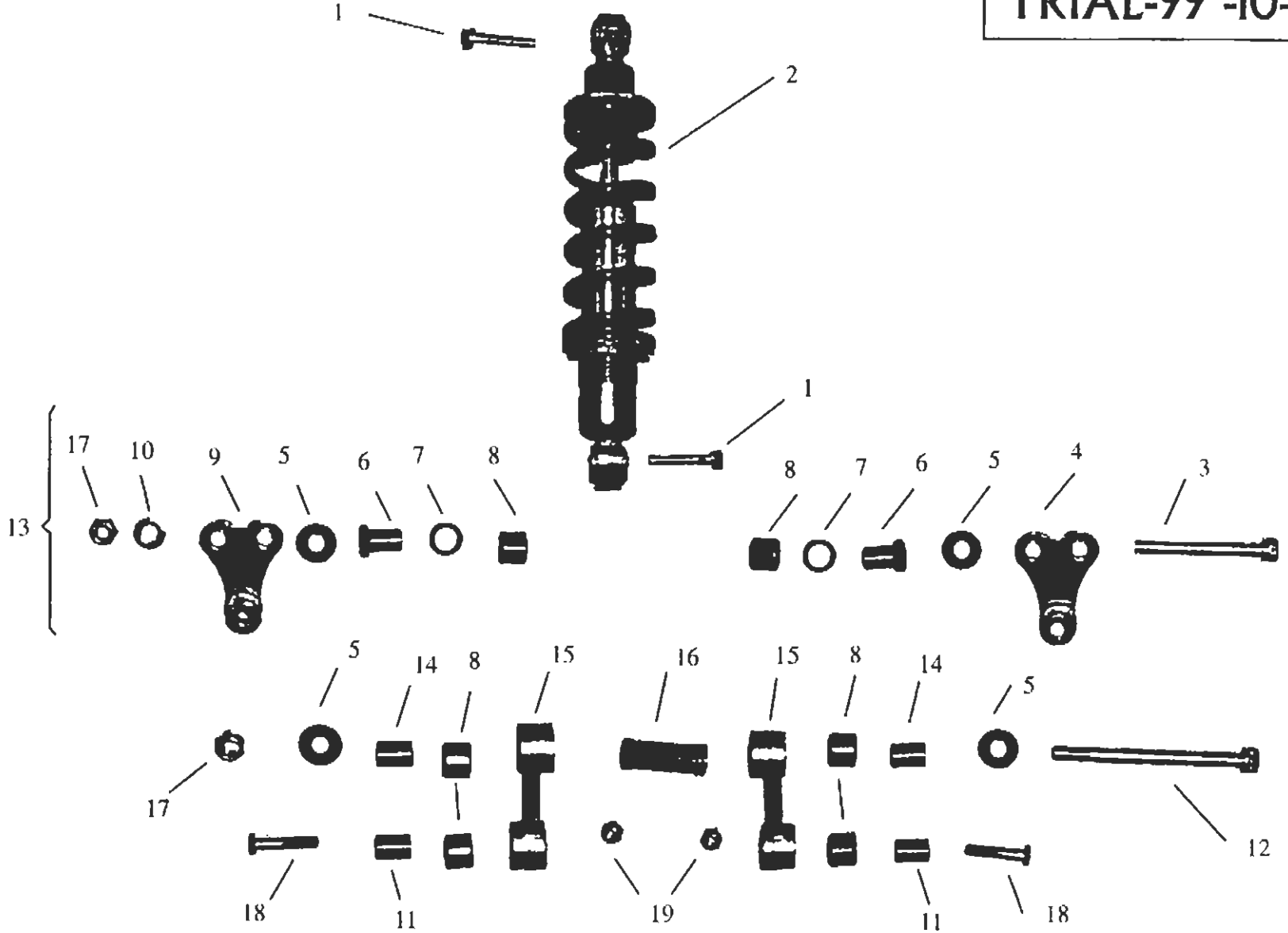

Nº	DESCRIPCION	270cc.	125cc.	200cc.	249cc.	321cc.	Cant.
1	Allen 10x45 / Screw, bolt allen 10x45	T0310046					2
2	Amort. muelle amarillo / Cpt, rear shock assy/yellow spring	BT27914004					1
3	Allen 10x80 .esp umbr. Balan. / Screw, bolt allen 10x80	T0210080					1
4	Balancin suspensión Izq. / Rocker arm suspension left	BT27914018					1
5	Arandela reglaje 10. 5x2x6x0.5 / Regulate washer	T4001026					4
6	Casquillo balancin / Rocker arm bushing	BT27914025					2
7	Reten 15x21x2 / Catch 15x21x2	C230000					2
8	Cojinetes agujas DL1516 / Firing-pin ball bearing	BT27714009					6
9	Balancin suspensión derecho / Rocker arm suspension right	BT27914017					1
10	Arandela 10x21x2 / Whasher 10x210x2	T4010021					1
11	Casquillo susp. Diam. 8 / Bushing top diam. 8	BT27712014					2
12	Allen 10x110 / Screw, bolt 10x110	T0310121					1
13	Cto. Balancin / Cpt. rocker arm	BT27914005					1
14	Casquillo susp. Diam. 10 / Bushing diam. 10	BT27712005					2
15	Bieleta / Conecting rob susp.	BT27914008					2
16	Distanciador balancin / Rocker arm spacer	BT27914016					1
17	Tuerca autobl. M10 clase / Nut nylock M10 class	T2110001					2
18	Tornillo especial 8x38 / Screw, bolt special 8x38	T0118038					2
19	Tuerca autobl. M8 alta / Nut nylock M8 tall	T2108002					2

TRIAL-99 -11-

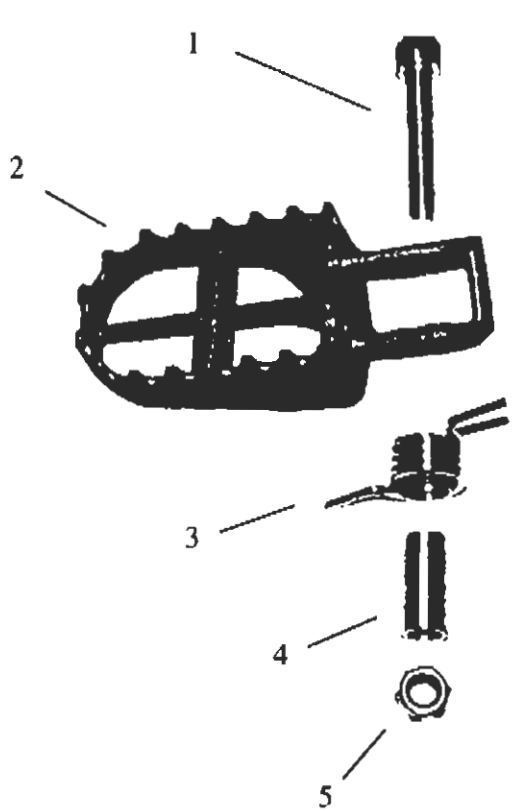

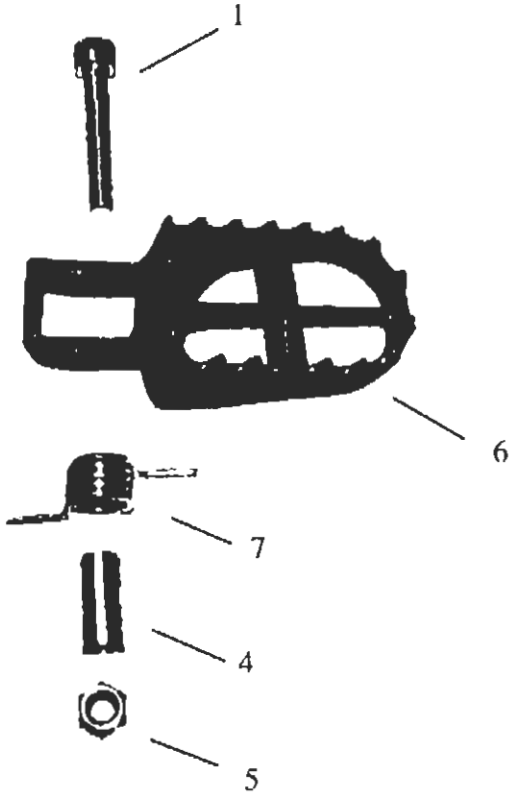

N°	DESCRIPCION	270cc	125cc	200cc	249cc	321cc	Cant.
1	Allen 8x45 estribo / Screw/bolt allen	T0308045					2
2	Estribo izquierdo / Footstep, left	BT27910003					1
3	Muelle estribo izquierdo / Spring footstep, left	M100004					1
4	Casquillo estribo / Bush footstep	BT27910006					2
5	Tuerca autoblocante M8 baja / Nut nylock	T2108001					2
6	Estribo derecho / Footstep, right	BT27910002					1
7	Muelle estribo derecha / Spring footstep, right	M100003					1

TRIAL-99 -12-

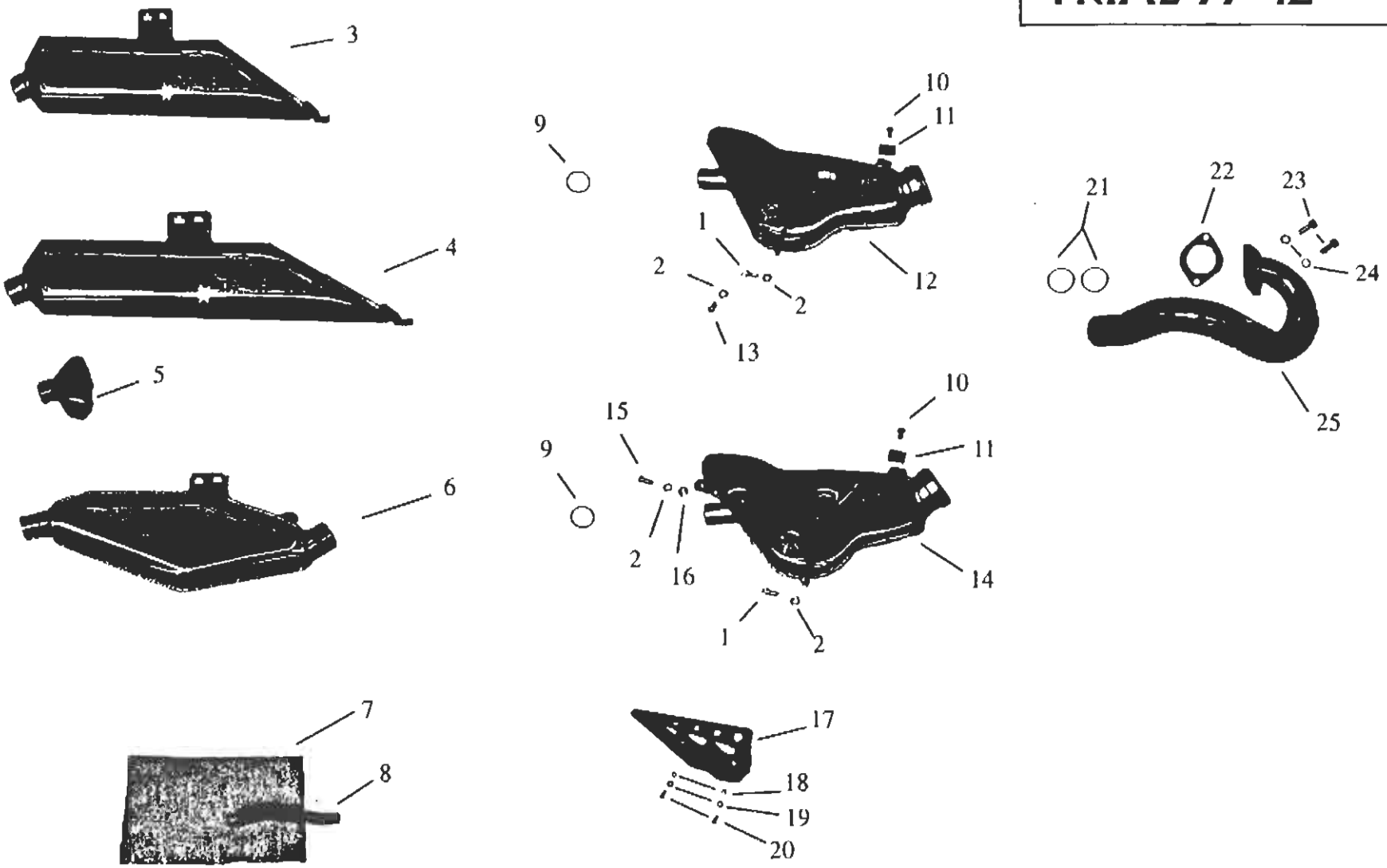

Nº	DESCRIPCION	270cc	125cc	200cc	249cc	321cc	Cant.
1	Allen 6x14 / Screw, bolt allen 6x14	T0306014					1
2	Arandela plana 6x12x1,5 / Washer plane 6x12x1,5	T4006012					2
3	Silencioso final 200 / Final silencer 200		BT12826002	BT12826002			1
4	Silencioso final 270/ Final silencer 270	BT27826002			BT27826002		1
5	Cazoleta final silencioso 98 / Cazoleta silencer final 98	B600321					1
6	Silencioso final 321/ Final silencer 321					BT32726002	1
7	Fibra silencioso mod. 95 /Silencer fibre	B600315					1
8	Tubo inter. Silen./ Silencer inside tube	B600320					1
9	Torica silen.final DNB 27. 5x3 / O'ring silencer	C280002					1
10	ULS 6x12 / Screw, bolt ULS 6x12	T0506012					1
11	Tuerca nut 956 enjaulada M6 / Cage nut M6	T2606000					1
12	Silencioso intermedio / Silencer interval 98	BT27926020	BT27926020	BT27926020	BT27926020		1
13	ULS 6x10 / Screw, bolt ULS 6x10	T0506010	T0506010	T0506010	T0506010		1
14	Silencioso intermedio 321/ Silencer interval 321					BT32926020	1
15	ULS 6x16 / Screw, bolt ULS 6x16	T0506016					1
16	Tuerca con arandela M6 / Nut with washer M6	T2206000					1
17	Protector escape / Exhaust protector	P360351					1
18	Tuerca M5 / Nut M5	T200500					2
19	Arandela aislante5x10x1/ Insolate washer 5x10x1	B600006					2
20	ULS 5x12 / Screw, bolt ULS 5x12	T0505012					2
21	Torica silen. Int. 44. 05x3.53/ O'ring interval silencer	C290000					2
22	Junta tuho escape / Exhaust gasket	BT27926003					1
23	Allen 8x20/ Scew, bolt allen 8x20	T0308020					2
24	Arandela glober 8x14x2 / Glober washer 8x14x2	T4008314					2
25	Tubo escape / Exhaust	BT27826001	BT20826001	BT20826001	BT27826001	BT27826001	1

TRIAL-99 -13-

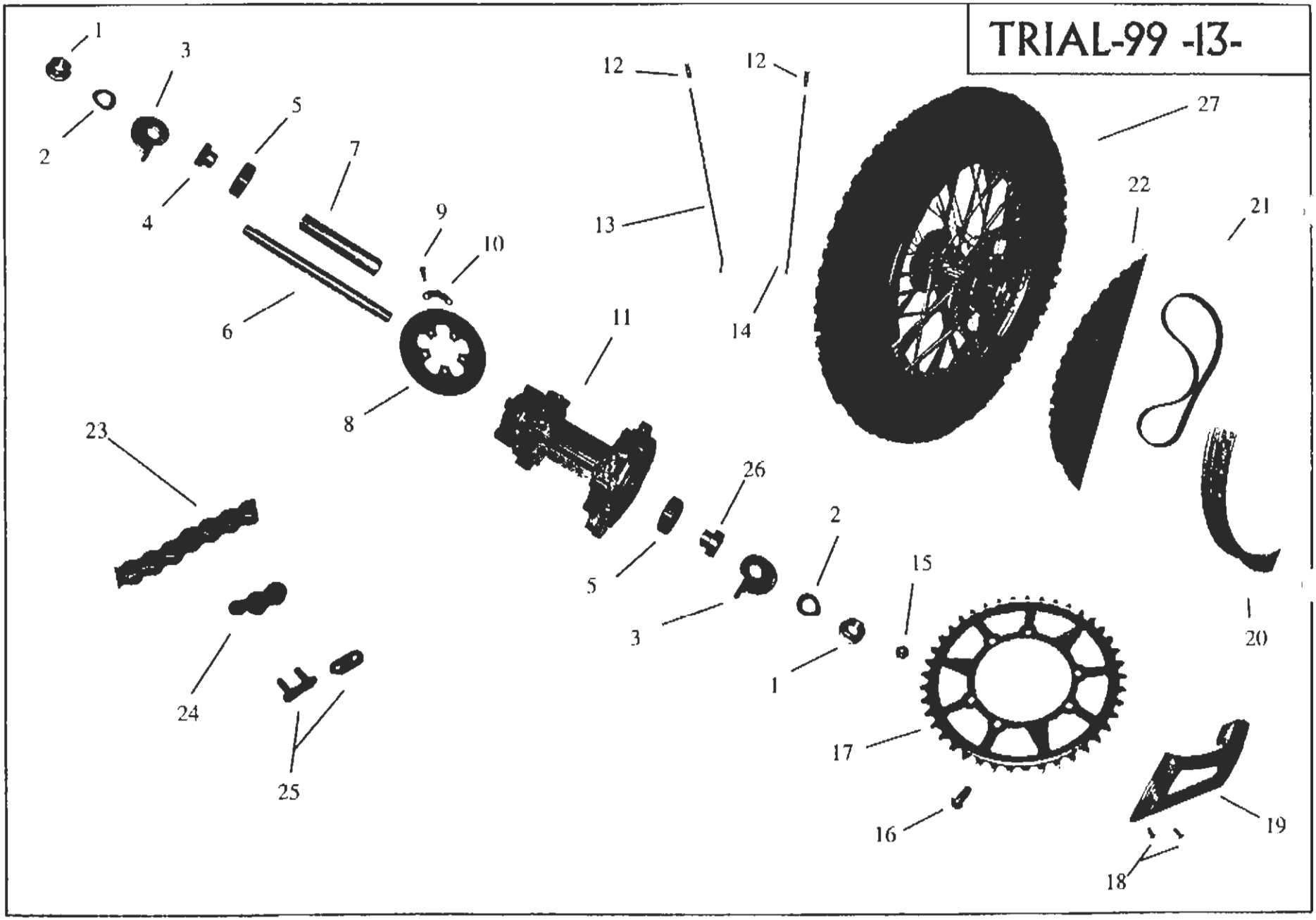

Nº	DESCRIPCION	270cc.	125cc.	200cc.	249cc.	321cc.	Cant.
1	Tuerca rueda trasera / Nut axle wheel rear.	R640001					2
2	Arandela eje tras. 17x30x1.5 / Whasher axle rear	T4017030					2
3	Excéntrica trasera / Sail cam adjuster rear	R620001					2
4	Casquillo derecho / Spacer right	BT27718021					1
5	Cojinete cubo / Bearing hub	C160001					2
6	Eje rueda tras./ Axle wheel rear	R590003					1
7	Casquillo int. Buje trasero / Spacer, int. Hub, rear	BT27718052					1
8	Disco freno trasero 130 / Brake disk rear	BT27922012					1
9	Allen 6x18 / Screw, bolt 6x18	T0316018					1
10	Soporte imán cuenta Km. / Magnet support speedmeter	BT27934012					1
11	Buje rueda tras. Trial 97 / Cpt. hub rear trial	BT27718027					1
12	Tuerca radios 3.5 mm. Rueda tras / Nut spoke, wheel rear	BT27718016					36
13	Radios 215x3.5 Rueda tras. / Spoke 215x3.5 wheel rear	BT27718014					18
14	Radios 208x3.5 rueda tras. / Spoke 208x3.5 wheel rear	BT27718015					18
15	Tuerca autobl. M-8 baja / Nut M8 low locknut	T2108001					6
16	ULS 8x20 Plat, prot. / Screw/bolt ULS 8x20	T0508020					6
17	Corona Z-41 250 / Spockett Z-41	R840001	R840002	R840002	R840001	R840001	1
18	ULS 5x10./ Screw/bolt ULS 5x10	T0505010					2
19	Protector corona tras./ Protector spocket rear.	P360301					1
20	Llanta trasera trial 97 / Rim rear trial 97	BT27718011					1
21	Flap llanta tras. / Flap rim rear	R500115					1
22	Cubierta trasera 400x18 TBLS / Tyre wheel rear, TBLS	N200100					1
23	Cadena 100 pasos / Chain 100 link	B480101					1
24	Media malla engan. cadena trial / half mesh split link chain	B500001					1
25	Enganche cadena / Split link chain	B500000					1
26	Casquillo izq. / Spacer left	BT27918036					1
27	Cto. Rueda trasera / Cpt. wheel real	BT27918100	BT12918100	BT12918100	BT27918100	BT27918100	1

TRIAL-99 -14-

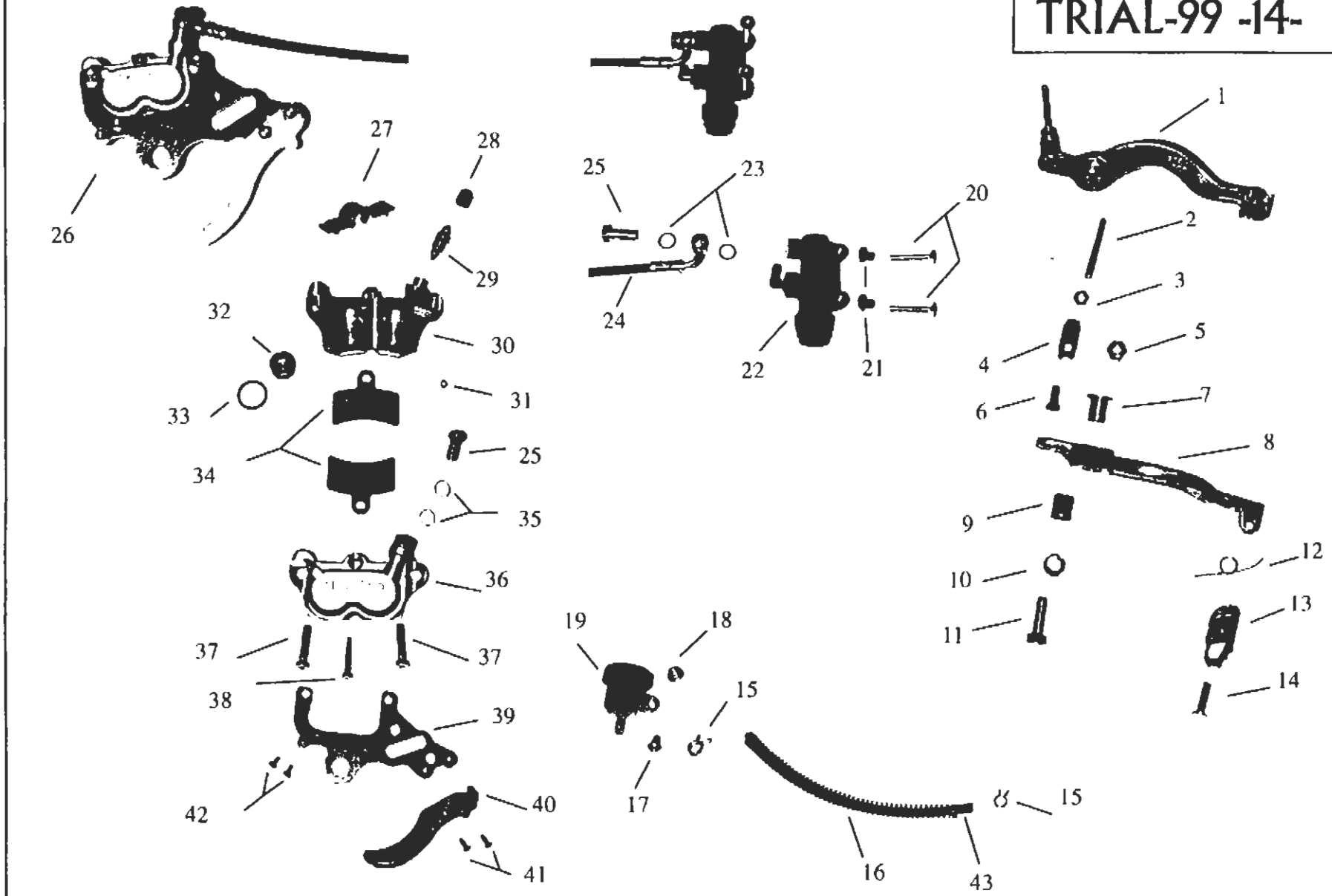
1
2
3
4
5
6
7
8
9
10
11
12
13
14
15
15
16
17
18
19
20
21
22
23
24
25
25
26
27
28
29
30
31
32
33
34
35
36
37
37
38
39
40
41
42
43

Nº	DESCRIPCION	270cc.	125cc.	200cc.	249cc.	321cc.	Cant.
32	Pistón freno / Brake piston	BT27922072					4
33	Torica (goma pinza líquido freno) / Seal	BT27922052					4
34	Pastilla de freno / Brake pad galfer	BT27922065					2
35	Arandela 10x14x1 / Washer	BT27922072					2
36	Semi pinza tras. Ext. / semi caliper rear ext.	BT27922076					1
37	Allen 8x35 / Screw, bolt allen 8x35	T0318035					2
38	Clip suj. pastilla freno / Clip retainer, brake	BT27922006					1
39	Soporte pinza / Caliper rear support	BT27934045					1
40	Protector disco tras. / Protector disk rear	BT27728012					1
41	ULS 6x12 tope freno, pro. Fil / Screw/bolt ULS 6x12	T0506012					2
42	Tornillo especial 4x9 / Screw, bolt esp. 4x9	T0204009					2
43	Tubo desvapor. Carter / Tube tank; brakes	L200030					1

Nº	DESCRIPCION	270cc.	125cc.	200cc.	249cc.	321cc.	Cant.
1	Cto. Pedal freno trial / Cpt. pedal brake trial	BT27922021					1
2	Varilla freno trasera / Rod brake, rear	R710103					1
3	Tuerca M-6 baja / Nut M6 low	T2006001					1
4	Horquilla varilla freno / Joint, brake rod	R715100					1
5	Tuerca autoblocante M8 alta / Nut nylock	T2108002					1
6	Pasador varilla freno / Retainer, adjuster brake	R720000					1
7	Casquillo puls. Freno tras. / Spacer, puls. Brake	R830002					1
8	Pedal freno trial 99 / Pedal brake trial 99	BT27922016					1
9	Glacier pedal freno / Glacier pedal brake	C200101					1
10	Arandela plana 8x17x1.5 / Washer plane 8x17x1.5	T4006016					1
11	Hexagonal 8x25 / Screw/ bolt hexagonal M8x25	T0108025					1
12	Muelle punt. Pedal retractil / Spring pedal, end gear clever	M121000					1
13	Puntera pedal freno trial 98 / Toe pedal brake trial 98	BT27922017					1
14	Remache hierro 5x18 zincado / Iron rivet 5x18 zincate	BE25922018					1
15	Abrazadera muelle de 9 / Spring clevis	L200036					2
16	Muelle desvaporizador / Spring breather	M150000					1
17	ULS 5x12 , bom. AG. / Screw/bolt ULS 5x12	T0506012					1
18	Tuerca M5 con arandela / Nut with washer M5	T2205000					1
19	Depósito líquido frenos / Tank, liquid brakes	L200010					1
20	Allen con. 6x35 / Screw bolt allen 6x35	T0406035					2
21	Casq. Suj. bomba tras. / Pivot / bush suj. pump rear	R350110					2
22	Bomba freno tras./ M/CYL brake rear	R350100					1
23	Arandela cobre 10x14x1 / Washer copper pad	R330001					2
24	Latiguillo freno trasero negro / Brake pipe rear, black	R310104					1
25	Tor. Lat. bomba freno tras. / Screw/ bolt pressure hose	R320000					2
26	Cto. Pinza de freno trasera / Cpt. caliper brake rear	BT27922001					1
27	Tapa plàstico pastilla freno/ Plastic cover brake pad	BT27920028					1
28	Tapon sangrador pinza / Top, caliper sangrador	BT27922055					1
29	Sangrador pinza fren. del./ Screw bleeder caliper brake front	BT27922060					1
30	Semi pinza tras. Int. / Semi caliper rear interior	BT27922077					1
31	Torica pequeña D.3x1,5 EPDM / Small seal	BT27922074					1

TRIAL-99 -15-

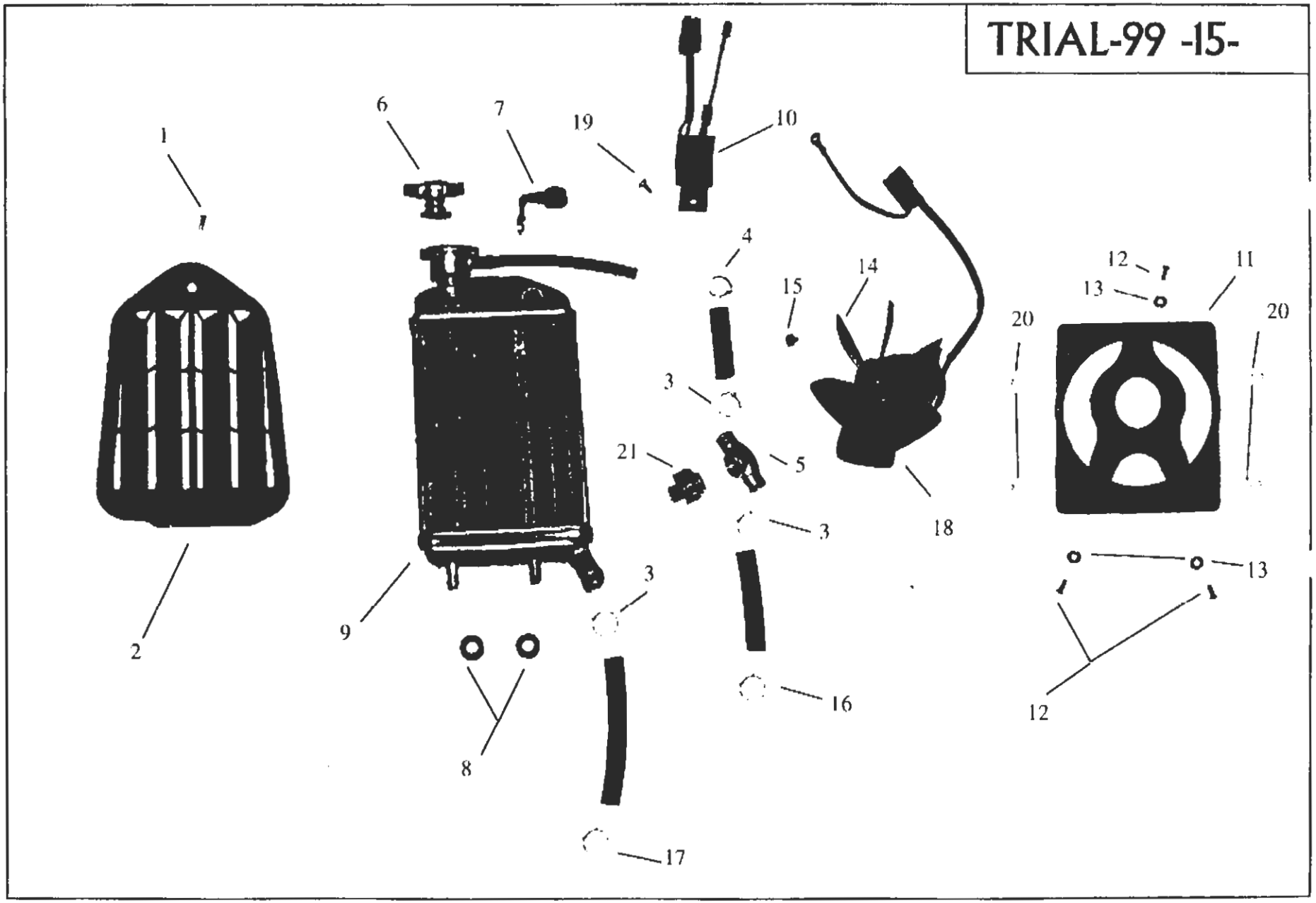

Nº	DESCRIPCION	270cc.	125cc.	200cc.	249cc.	321cc.	Cant.
1	ULS 6x12 Tope fren. Pro. Fil. / Screw, bolt 6x12	T0506012					1
2	Rejilla radiador / Luggage rack	BT27820001					1
3	Abraz. Cobra-23 / Clamp cobra-23	L200041					3
4	Abraz. Cobra-22 / Clamp cobra-22	L200038					1
5	Soporte termo-contacto / Termp-contact support	L200057					1
6	Tapon radiador / Radiator stopper	L200110					1
7	Soporte radiador / Radiator support	BT27932015					1
8	Gomas radiador / Radiator rubber	G220000					3
9	Radiador / Radiator	L200102					1
10	Modulo Ventilador / Ventilator module	L300006					1
11	Protector ventilador / Ventilator protector	L300011					1
12	Hexagonal 4x16 / Scew,bolt hexagonal 4x16	T0104016					3
13	Arandela plana 4x12x1 / Washer plane 4x12x1	T4004012					3
14	Aspa ventilador suelta / Ventilator bladeloose	L300002					1
15	Casquillo ventilador 96 / Ventilator bushing	L300016					2
16	Abraz. Cobra-21 / Clamp cobra-21	L200046					1
17	Abraz. Cobra-19 / Clamp cobra-19	L200043					1
18	Ventilador D-120 / Ventilator D-120	L300001					1
19	Philips rosca chapa 4,2x10 / Screw, bolt philips 4,2x10	T0604210					1
20	Tor. Rosca chapa 3x10 / Screw thread 3x10	T0603010					4
21	Termo-contacto / Termp-contact	M01020003					1

TRIAL-99 -16-

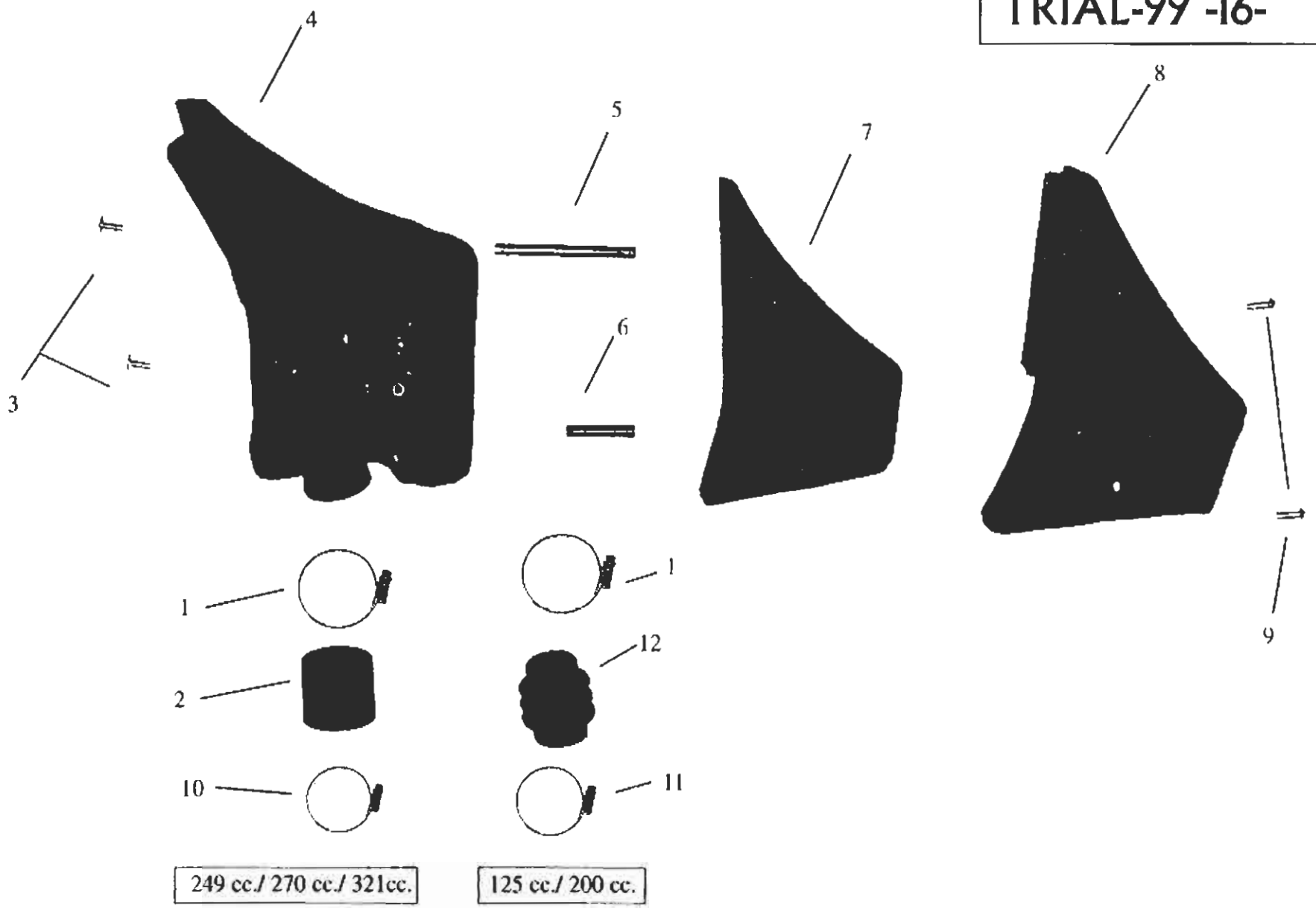

Nº	DESCRIPCION	270cc.	125cc.	200cc.	249cc.	321cc.	Cant.
1	Abraz. 25-40 / Clamp 25-40	B640001					1
2	Tubera caja filtro / Tube, air cleaner connecting	BT27836010					1
3	Tornillo philips 6x15/ Screw, bolt philips 6x15	T0706015					2
4	Caja filtro / Air cleaner housing	BT27728001					1
5	Dist. Filtro aire largo / Spacer in air clenaer housing, large	BT27728005					1
6	Dist. Filtro aire corto / Spacer in air cleaner housing, short	BT27728004					1
7	Filtro aire – 97 / Air cleaner	BT27728000					1
8	Tapa caja filtro 97 / Lid, air cleaner housing	BT27728010					1
9	ULS 6x16 Pl. prim, guar, fil / Screw,bolt ULS 6x16	T0506016					2
10	Abrazadera 30-45 / Clamp 30-45	B640005			B640005	B640005	1
11	Abrazadera 32-50 / Clamp 32-50		B640000	B640000			1
12	Tubera caja filtro 125-200 / Tube, air cleaner connecting		G520002	G520002			1

TRIAL-99 -17-

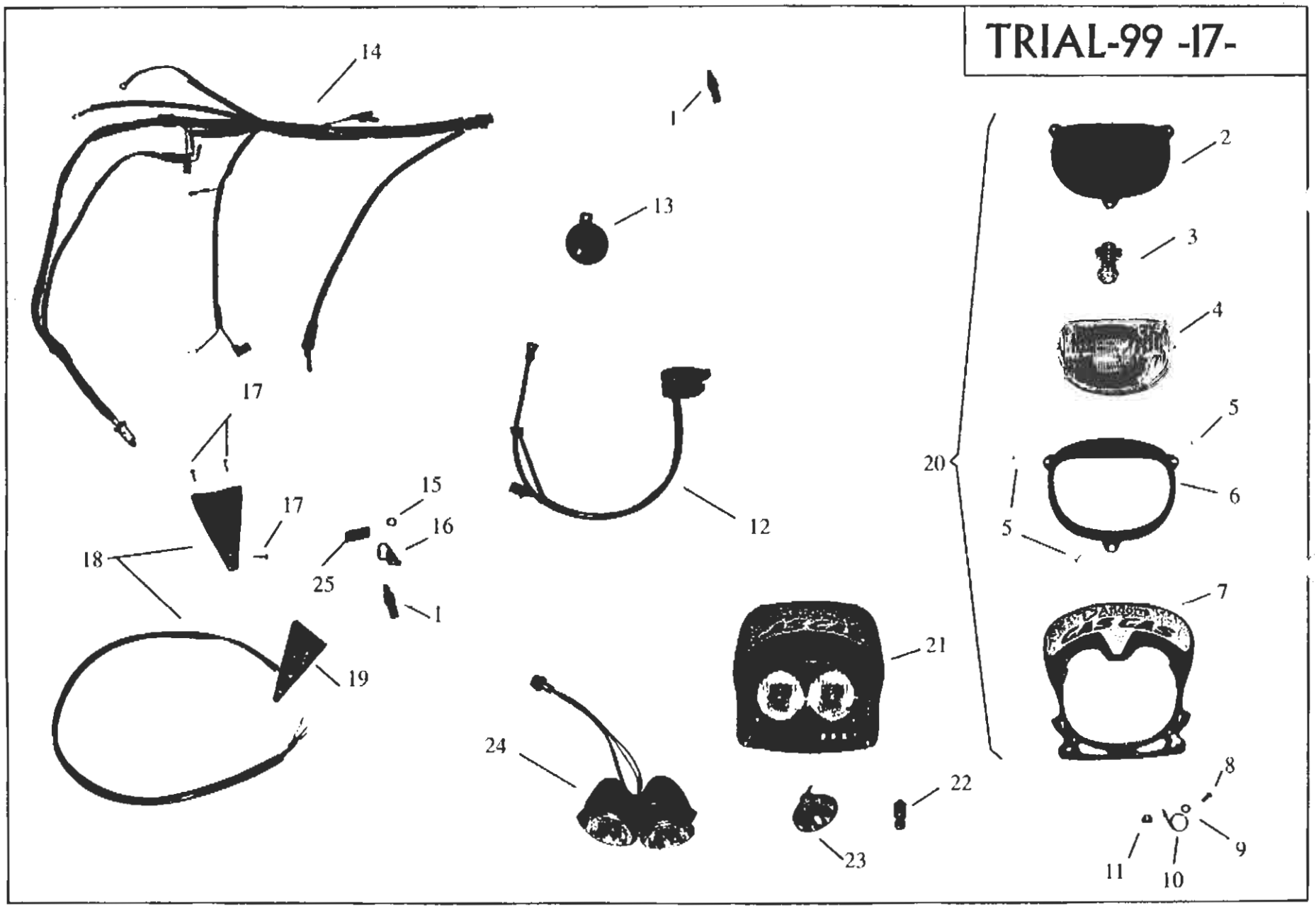

Nº	DESCRIPCION	270cc.	125cc.	200cc.	249cc.	321cc.	Cant.
1	Pulsador stop pequeño / Stop push-button small	L300066					2
2	Soporte tapa optica trasera / Support optic cover rear	BT27820027			BT27820027	BT27820027	1
3	Lámpara 12V15W casquete / Lamp 12V15W	L300115					1
4	Optica faro / Guide pilot optic	BT27820022			BT27820022	BT27820022	1
5	Tor. Rosca chapa 3x10 / Screw thread 3x10	T0603010					3
6	Soporte optica / Optic support	BT27820028			BT27820028	BT27820028	1
7	Faro delantero / Headlight front	BT27920020			BT27920020	BT32920020	1
8	Aranadela plana 6x12x1.5/ Washer plane	T4006012					1
9	ULS 6x12 / Screw, bolt ULS 6x12	T0506012					1
10	Gancho inoxidable / Rustless hook	M130000					1
11	Tuerca con arandela M6 / Flange nut M6	T2106600					1
12	Conmutador luz / Light switch	BT27834001	L300037	L300037	BT25834001	BT27834001	1
13	Cto. Claxon / Cpt. horn	L300105					1
14	Instalación trial / Trial installation	BT27734014					1
15	Tuerca R-1/4 F. Hexagonal 10x3 / Hexagonal nut R-1/4 F.	L300098					1
16	Soporte interruptor stop peq. / Switch support stop	L300097					1
17	Tornillo rosca chapa 4x13 / Sheet screw, bolt 4x13	T0604013					3
18	Cto. Faro piloto tras. / Cpt. headlight rear	BT27934015					1
19	Bombilla 12V 10W / Buld 12V 100W	L200118					2
20	Grupo faro / Headlight group	BT27920120			BT27920120	BT32920120	1
21	Grupo faro 125, 200 / Headlight group 125, 200		BT20920020	BT20920020			1
22	Lámpara 12V 3W / Lamp 12V 3 W		L300119	L300119			2
23	Óptica suelta bifaro / Loose optic, two-headlight		P340110	P340110			1
24	Cto. Optico portafaro / Cpt. optic headlight case		P340111	P340111			1
25	Casqu. pulsador freno tras./ Bushing, push-button rear brake	BT27822029					1

TRIAL-99 -18-

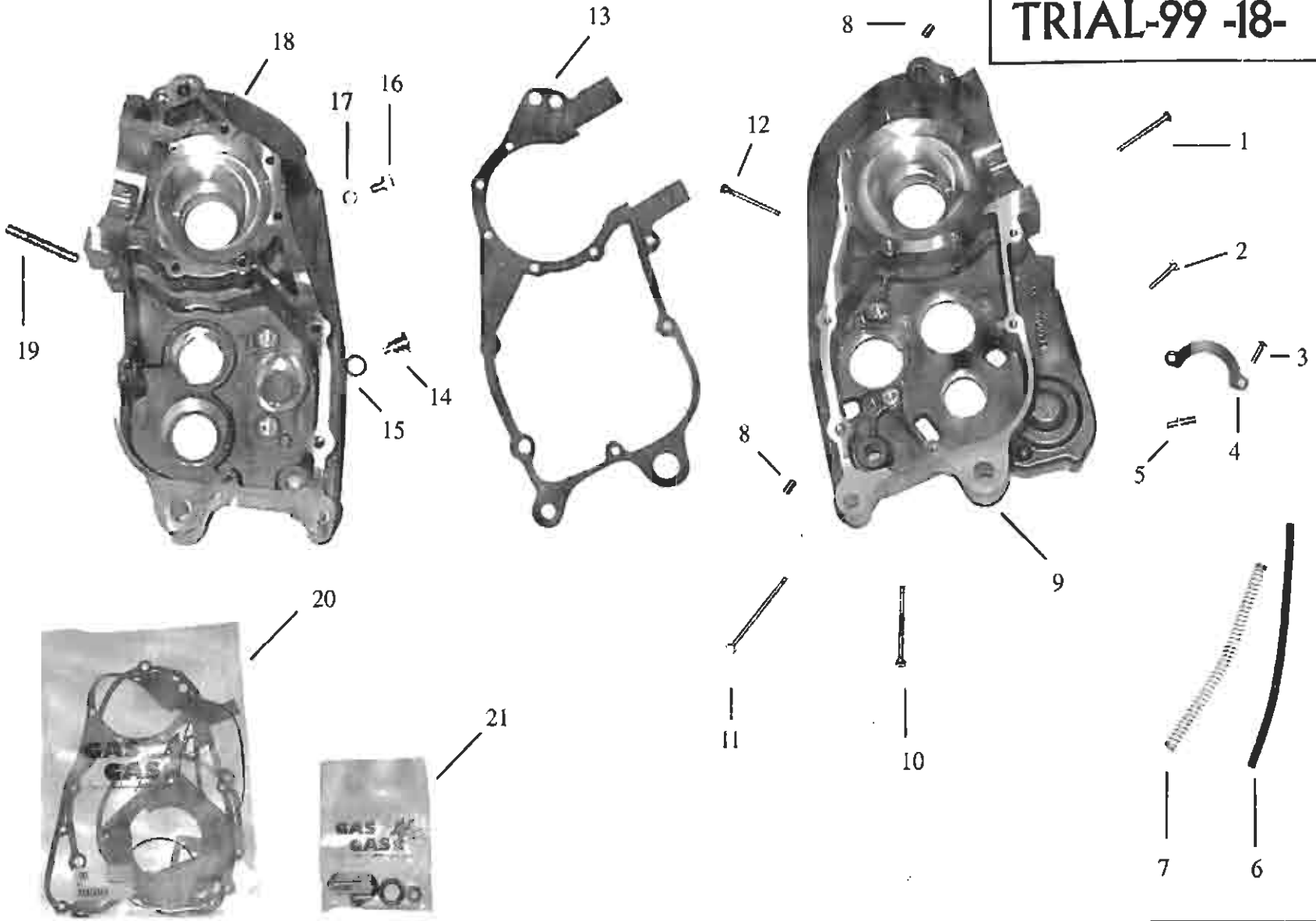

125 cc. / 200 cc.

Nº	DESCRIPCION	270cc.	125cc.	200cc.	249cc.	321cc.	Cant.
1	Allen 6x50 DIN 912 cárter / Screw, bolt allen 6x50		T0306050	T0306050			4
2	Allen 6x35 / Screw, bolt allen 6x35		T0306035	T0306035			1
3	ULS 6x16 / Screw, bolt ULS 6x16		T0506016	T0506016			2
4	Platina primario / Plate, kickstart		M02628001	M02628001			1
5	Desvaporizador cárter / Breather crankcase		M01032001	M01032001			1
6	Tubo sobrante rad. 5x8 / Tube, breather 5x8		G460000	G460000			1
7	Muelle desvaporizador / Spring breather		M150000	M150000			1
8	Casq. Centr. cárter 6x9x14 / Bushing centralize crankcase		M01017000	M01017000			2
9	Cárter derecho gris plata / Crankcase, right grey silver		MT12710000	MT12710000			1
10	Allen 6x70 8.8 Cárter / Screw, bolt allen 6x70		T0306070	T0306070			5
11	Allen 6x80 DIN 912 cárter / Screw, bolt allen 6x80		T0306080	T0306080			1
12	Allen 6x60 / Screw, bolt allen 6x60		T0306060	T0306060			2
13	Junta cárter 0.3 / Crankcase gasket		MT12944001	MT12944001			1
14	Tapón vaciado aceite con imán / Empty cap oil with magnet		M01016005	M01016005			1
15	Torica tornillo aceite 12x2x / O'ring level plug		M01016100	M01016100			1
16	Allen 8x20 / Screw, bolt 8x20		T0308020	T0308020			1
17	Arandela cobre 8x12 / Washer copper 8x12		M01033000	M01033000			1
18	Cárter izquierdo gris plata / Crankcase left grey silver		MT12710001	MT12710001			1
19	Espárrago cilindro largo / Stud, bolt cylinder		M01612003	M01612003			4
20	Kit juntas trial y pampera / Kit gaskets trial and pampera		MT12944100	MT12944100			1
21	Cto.retenes trial / Cpt. oil seal trial		MT12944200	MT12944200			1

TRIAL-99 -19-

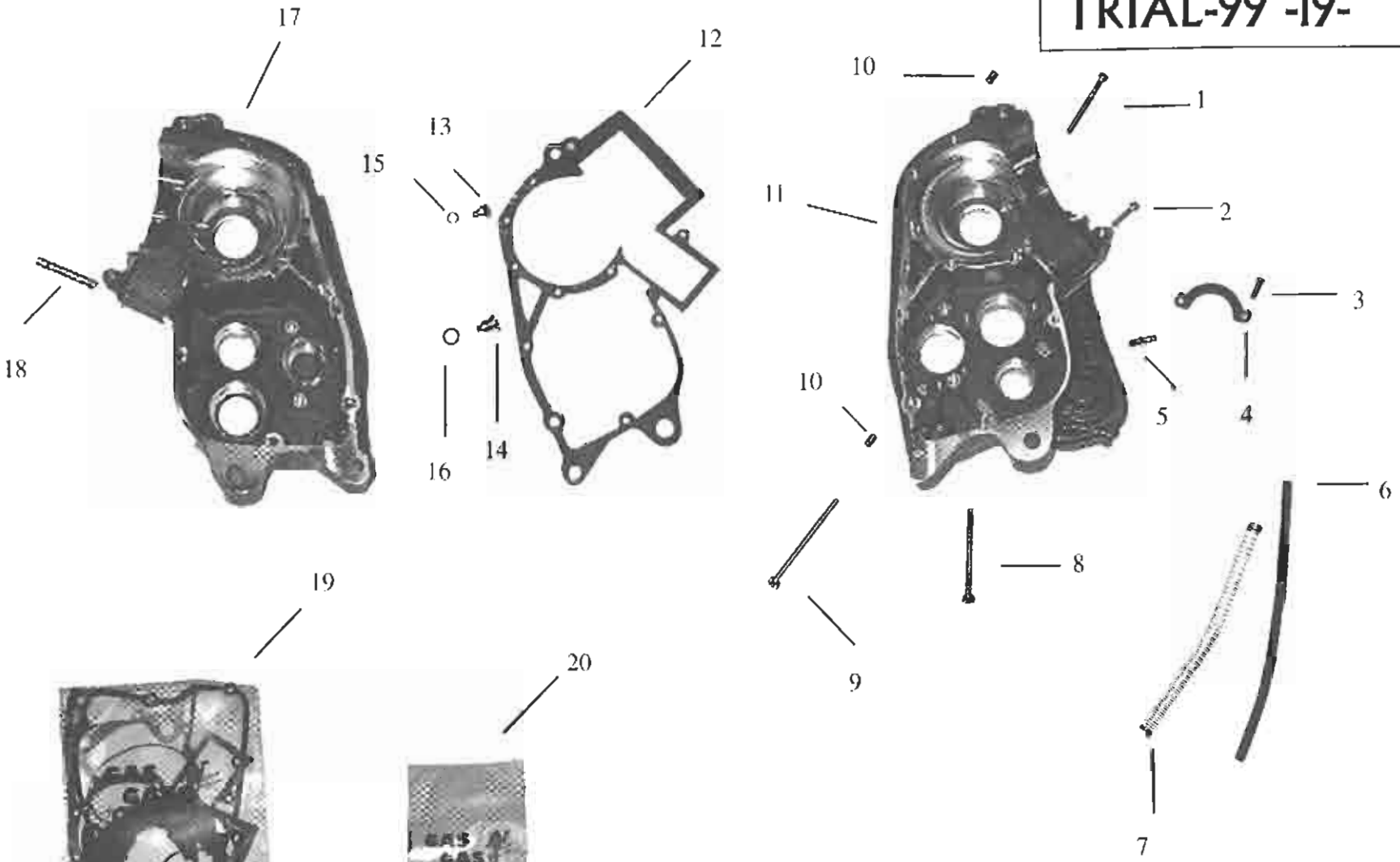

249 cc./ 270 cc./ 321 cc.

Nº	DESCRIPCION	270cc.	125cc.	200cc.	249cc.	321cc.	Cant.
1	Allen 6x50 DIN 912 cárter / Screw, bolt allen 6x50	T0306050			T0306050	T0306050	4
2	Allen 6x25 / Screw, bolt allen 6x25	T0306025			T0306025	T0306025	1
3	ULS 6x16 / Screw, bolt ULS 6x16	T0506016			T0506016	T0506016	2
4	Platina primario / Plate, kickstart	M02628001			M02628001	M02628001	1
5	Desvaporizador cárter / Breather crankcase	M01032001			M01032001	M01032001	1
6	Tubo sobrante rad. 5x8 / Tube, breather 5x8	G460000			G460000	G460000	1
7	Muelle desvaporizador / Spring breather	M150000			M150000	M150000	1
8	Allen 6x70 8.8 Cárter / Screw, bolt allen 6x70	T0306070			T0306070	T0306070	5
9	Allen 6x80 DIN 912 cárter / Screw, bolt allen 6x80	T0306080			T0306080	T0306080	1
10	Casq. Centr. cárter 6x9x14 / Bushing centralize crankcase	M01017000			M01017000	M01017000	2
11	Cárter derecho gris plata / Crankcase, right grey silver	MT27910000			MT27910000	MT27910000	1
12	Junta cárter 0.3 / Crankcase gasket	MT27944001			MT27944001	MT27944001	1
13	Allen 8x20 / Screw, bolt allen 8x20	T0308020			T0308020	T0308020	1
14	Tapón vaciado aceite con imán / Empty cap oil with magnet	M01016005			M01016005	M01016005	1
15	Arandela cobre 8x12 / Washer copper 8x12	M01033000			M01033000	M01033000	1
16	Arandela cobre 12x18x1.5 / Washer copper 12x18x1.5	ME25810030			ME25810030	ME25810030	1
17	Cárter izquierdo gris plata / Crankcase, left grey silver	MT27910001			MT27910001	MT27910001	1
18	Espárrago cilindro largo / Stud,blot cylinder	M01612003			M01612003	M01612003	4
19	Kit juntas trial y pampera / Kit gaskets trial and pampera	MT27944100			MT27944100	MT32944100	1
20	Cto.retenes trial / Cpt. oil seal trial	MT27944200			MT27944200	MT32944200	1

TRIAL-99 -20-

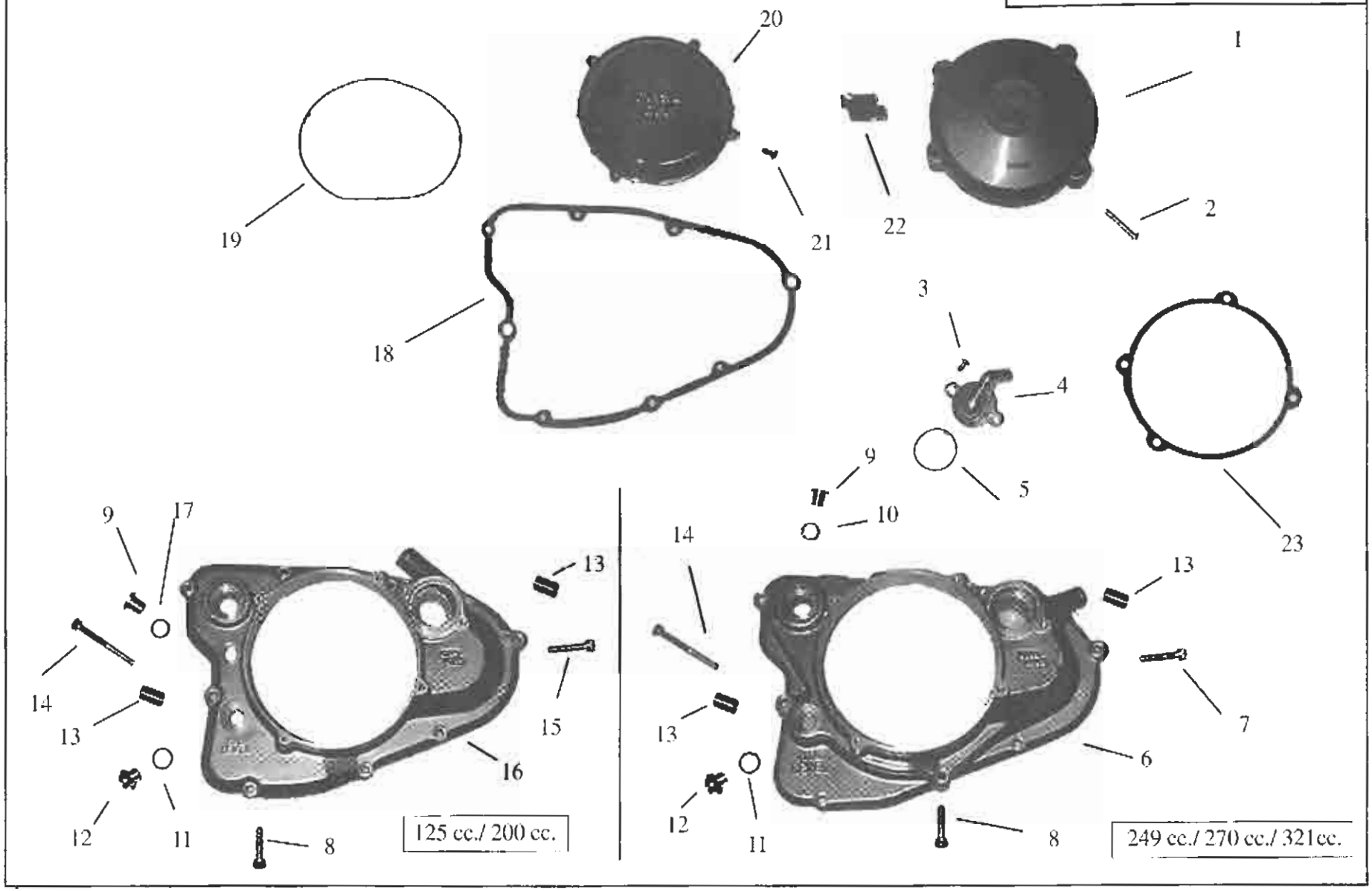

20
1
19
21
22
2
18
3
4
9
5
10
23
9
17
13
14
13
15
16
12
11
8
125 cc./ 200 cc.
14
13
13
7
6
12
11
8
249 cc./ 270 cc./ 321cc.

Nº	DESCRIPCION	270cc.	125cc.	200cc.	249cc.	321cc.	Cant.
1	Tapa volante 98 / Cover, fly-wheel	MT27910004					1
2	ULS 6x35 / Screw, bolt allen 6x35	T0506035					4
3	ULS 6x10 dirección / Screw, bolt allen 6x10	T0506010					2
4	Tapa bomba de agua / Cover water pump	M01012110					1
5	Torica tapa bomba agua / O`ring water pump cover	M04433000					1
6	Tapa embrague 99 / Cover clutch	MT27932001			MT27932001	MT27932001	1
7	Allen 6x30 / Screw, bolt allen 6x30	T0306030					1
8	Allen 6x25 / Screw, bolt allen 6x25	T0306025					4
9	Tapón aceite / Oil plug	M01016002					1
10	Arandela de cobre 12x18x1.5 / Washer copper	ME25810030			ME25810030	ME25810030	1
11	Arandela fibra ~~10x14x1.5~~ / Washer fiber 13x17x1.5	~~M01033005~~	M01016120				1
12	Visor nivel aceite en aluminio / Oil level clear plug	M01016110					1
13	Casqu. Centr.carter 6x9x14 / Bushi. central. Crank.	M01017000					2
14	Allen 6x55 / Screw, bolt allen 6x55	T0308045					1
15	Allen 6x35 / Screw, bolt allen 6x35	T0306035					1
16	Tapa embra. 125-200, 98 / Cover clutch 125-200		MT27732001CA	MT27732001CA			1
17	Torica tapón aceite 12x16x1.5 / O`ring oil plug		M01016100	M01016100			1
18	Junta tapa embrague / Cover clutch gasket	M04430002					1
19	Torica tapa embrague / O`ring clutch cover	M04434000					1
20	Tapa embra. pequeña pulida / Cover clutch minor	M01012250					1
21	ULS 5x12 / Screw, bolt ULS 5x12	T0505012					4
22	Adh.gas gas metal. / Metallic Gas Gas adhesive	PU00638011	BT20938056	BT20938056	PU00638011	BT32938056	1
23	Junta tapa volante / Gasket fly-wheel cover	M04431000					1

TRIAL-99 -21-

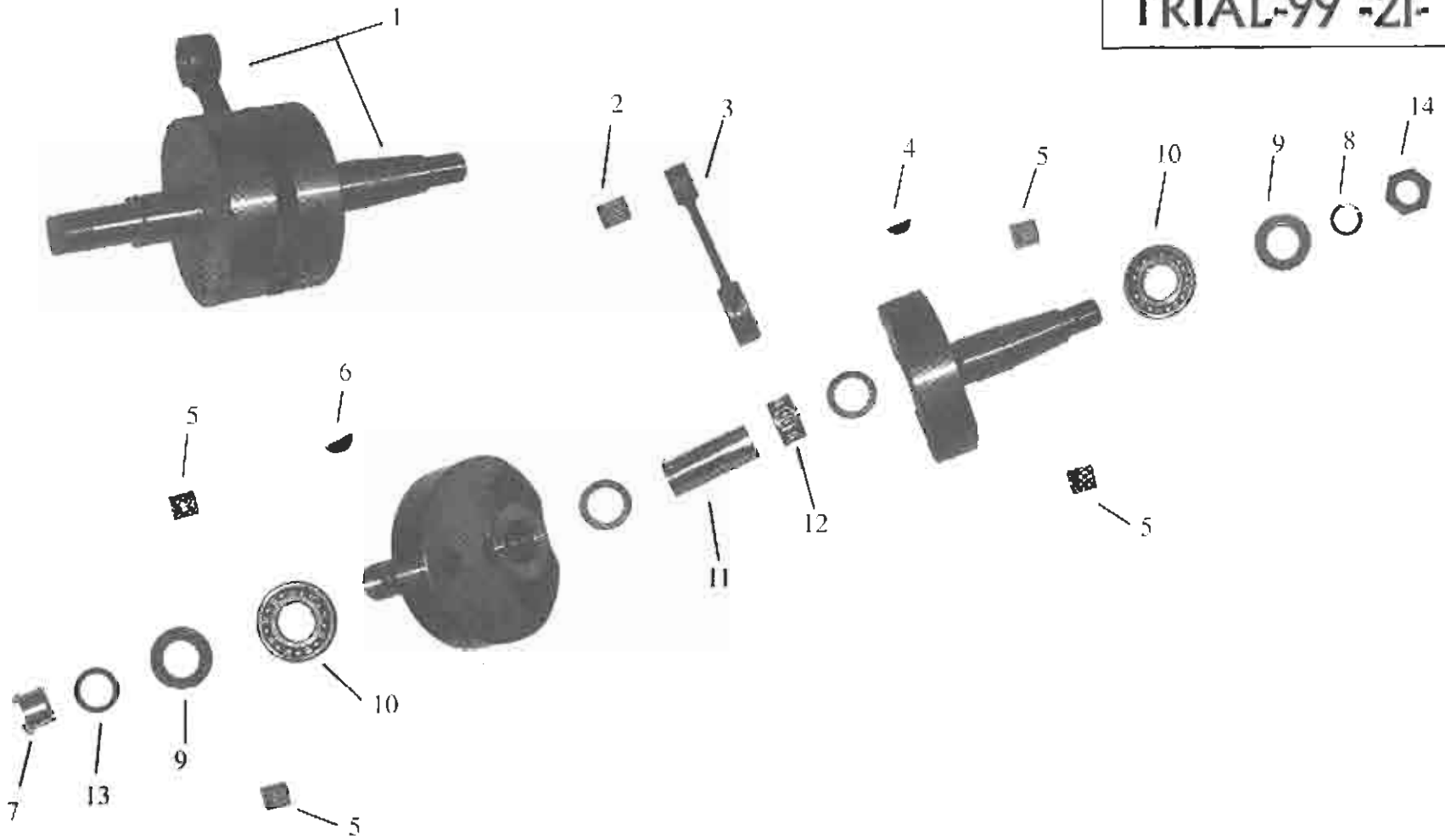

125 cc./ 200 cc.

Nº	DESCRIPCION	270cc.	125cc.	200cc.	249cc.	321cc.	Cant.
1	Cto. Cigüeñal 125-200 trial / Cpt. crank shaft assembly		M01210001	M01210001			1
2	Cojinete agujas 16x20x23 / Small end bearing		M01411100	M01411100			1
3	Cto. Biela 125-200 / Cpt. con rod assembly		M01218110	M01218110			1
6	Chaveta piñón contrapeso / Key. pinion		M01223000	M01223000			1
5	Tapón cigüeñal 20x20 125-200 / Crank shaft stopper		MT12712021	MT12712021			4
4	Chaveta volante / Key. ignition		M01224000	M01224000			1
7	Tuerca M16x150 / Nut ignition		M01222000	M01222000			1
8	Arandela volante magn. / Washer ignition magn.		M01221000	M01221000			1
9	Reten cigüeñal 25-40-8ASFP / Oil seal crank shaft		M01217001	M01217001			2
10	Coj. Cigüeñal 6205C3 / Bearing crank shaft		M01216002	M01216002			2
11	Bulon cigüeñal / Crank shaft pin		M01414002	M01414002			1
12	Coj. Cabeza bieleta 24x30x16.8 / Bearing big end		M01415001	M01415001			1
13	Arandela estriada intr. D.20 / Washer pinion crank shaft		M01219000	M01219000			1
14	Tuerca piñón contrapeso / Nut pinion crank shaft		M01220000	M01220000			1

TRIAL-99 -22-

249 cc./ 270 cc.

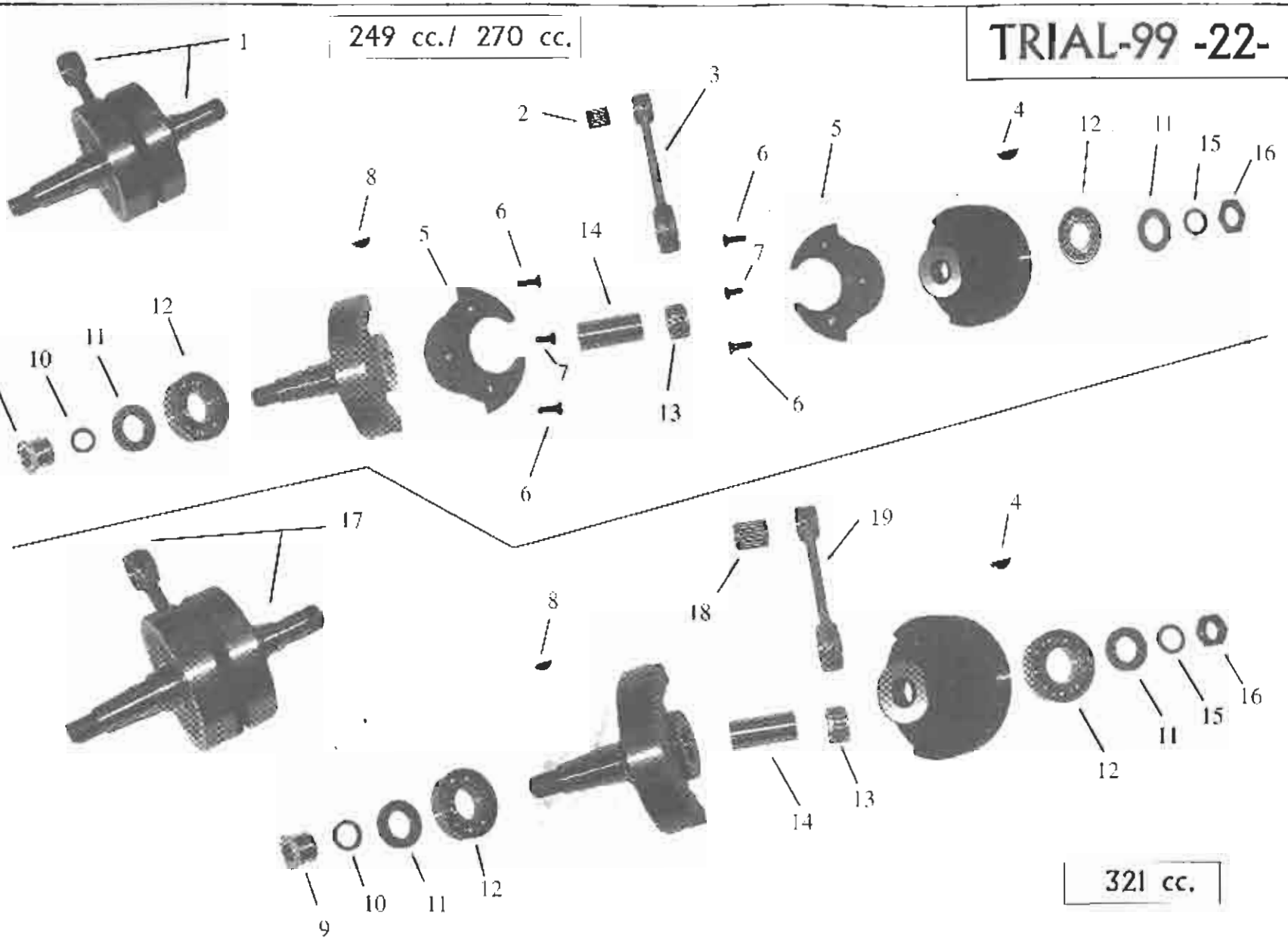

321 cc.

Nº	DESCRIPCION	270cc.	125cc.	200cc.	249cc.	321cc.	Cant.
1	Cto.cigüeñal 250-270 trial / Cpt.crank shaft assembly	MT27912000			MT27912000		1
2	Cojinete agujas pie biela 16x20x23 / Small end bearing	M01411100			M01411100		1
3	Cto. biela 249-270 / Cpt. con rod assembly	MT27812100			MT27812100		1
4	Chaveta piñón contrapeso / Key. Counterweight pinion	M01223000			M01223000	M01223000	1
5	Nylon contrapeso / Counterweight nylon	MT32912021			MT32912021		2
6	Torn. Con. 6x20 / Screw, bolt con. 6x20	T0406020			T0406020		2
7	Torn. Con. 6x16 / Screw, bolt con. 6x16	T0406016			T0406016		1
8	Chaveta volante / Key. Ignition	M01224000			M01224000	M01224000	1
9	Tuerca volante / Nut ignition	M01222000			M01222000	M01222000	1
10	Arandela volante magnético / Washer ignition magn.	M01221000			M01221000	M01221000	1
11	Reten cigüeñal 25-40-8 ASFP / Oil seal crank shaft	M01217001			M01217001	M01217001	2
12	Cojinete cigüeñal 6206 C3 / Bearing crank shaft	M01216001			M01216001	M01216001	2
13	Cojinete cabeza biela 24x30x16.8 / Bearing big end					M01415001	1
14	Bulon cigüeñal / Crank shaft pin	M01414001			M01414001	M01414001	1
15	Arandela estriada intr. D.20 / Washer pinion crank shaft	M01219000			M01219000	M01219000	1
16	Tuerca piñón contrapeso / Nut pinion crank shaft	M01220000			M01220000	M01220000	1
17	Cto. Cigüeñal 321 trial / Cpt. crank shaft assembly 321					MT32912000	1
18	Cojinete agujas pie biela 20x24x29.5 / Small end bearing					M01411000	1
19	Cto. Biela 321 / Cpt. crank shaft assembly					M01218002	1

TRIAL-99 -23-

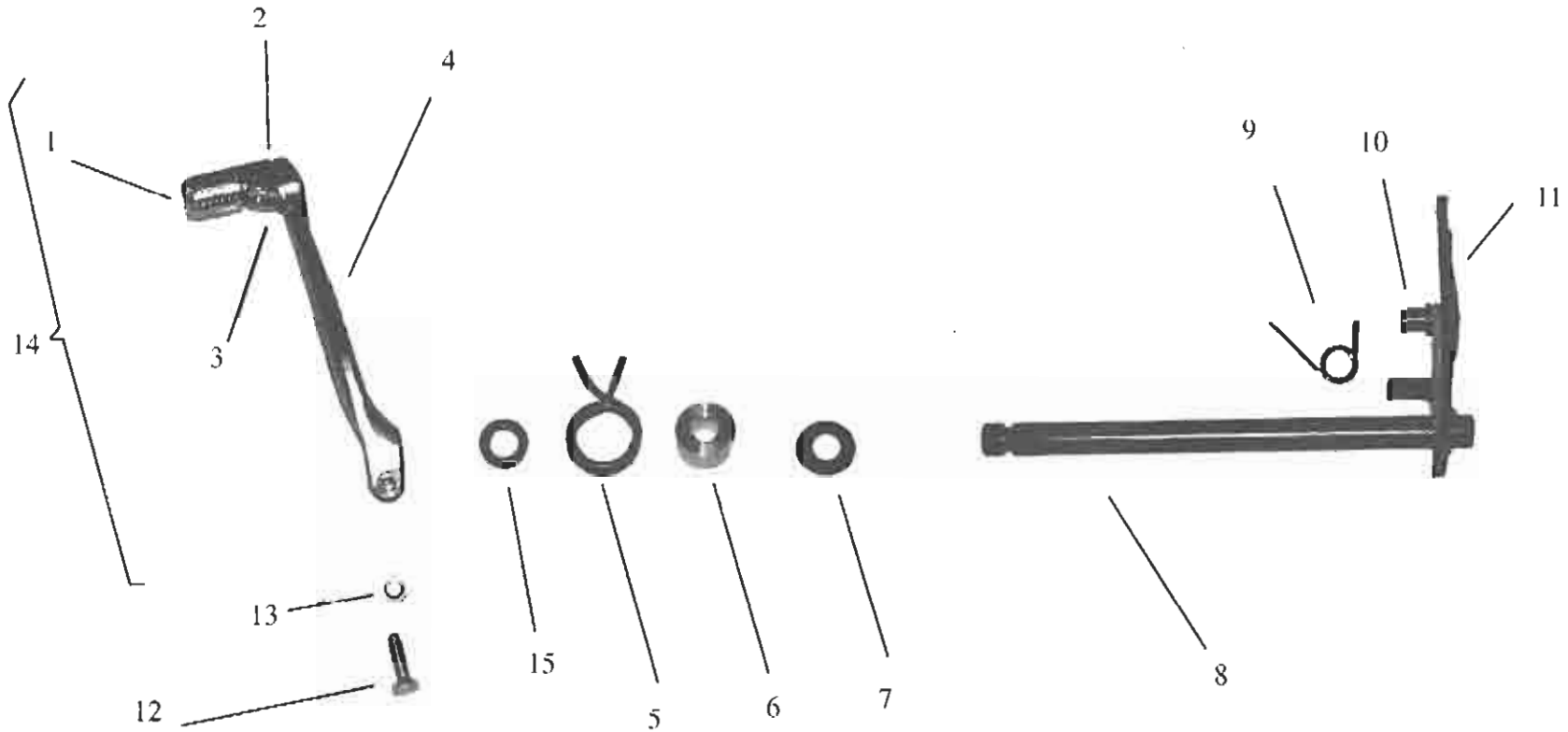

Nº	DESCRIPCION	270cc.	125cc.	200cc.	249cc.	321cc.	Cant.
1	Puntera pedal cambio 5644010 / Pedal, end gear lever	M03810050					1
2	Remache puntera cambio 6x18 / Rivet pedal, end	M03810010					1
3	Muelle punt. pedal camb. / Spring pedal, end gear lever	M121000					1
4	Pedal cambio / Pedal change	MT27936026					1
5	Muelle retorno selector / Spring, come back gear lever	MT27836007	M03812000	M03812000	MT27836007	MT27836007	1
6	Casquillo muelle selector / Pivot, bush spring gear lever	M03813000					1
7	Arandela cambio 26x12.2x0.3 / Washer change	M03810015					1
8	Cto. Eje selector / Cpt. gear lever axle	M03811001					1
9	Muelle platina escorpión /Scorpion work table spring	M03817301					1
10	Remache platina escorpión / Scorpion rivet work table	M03811005					1
11	Platina escorpión* / Scorpion work table	M03811100					1
12	Hexagonal 6x20 / Hexagonal 6x20	T0106020					1
13	Arandela plana 6x12x1,.5 / Washet plane 6x12x1.5	T4006012					1
14	Cto.pedal cambio / Cpt. pedal change	MT27936026C					1
15	Reten selector / Selector oil seal	M03821000					1

TRIAL-99 -24-

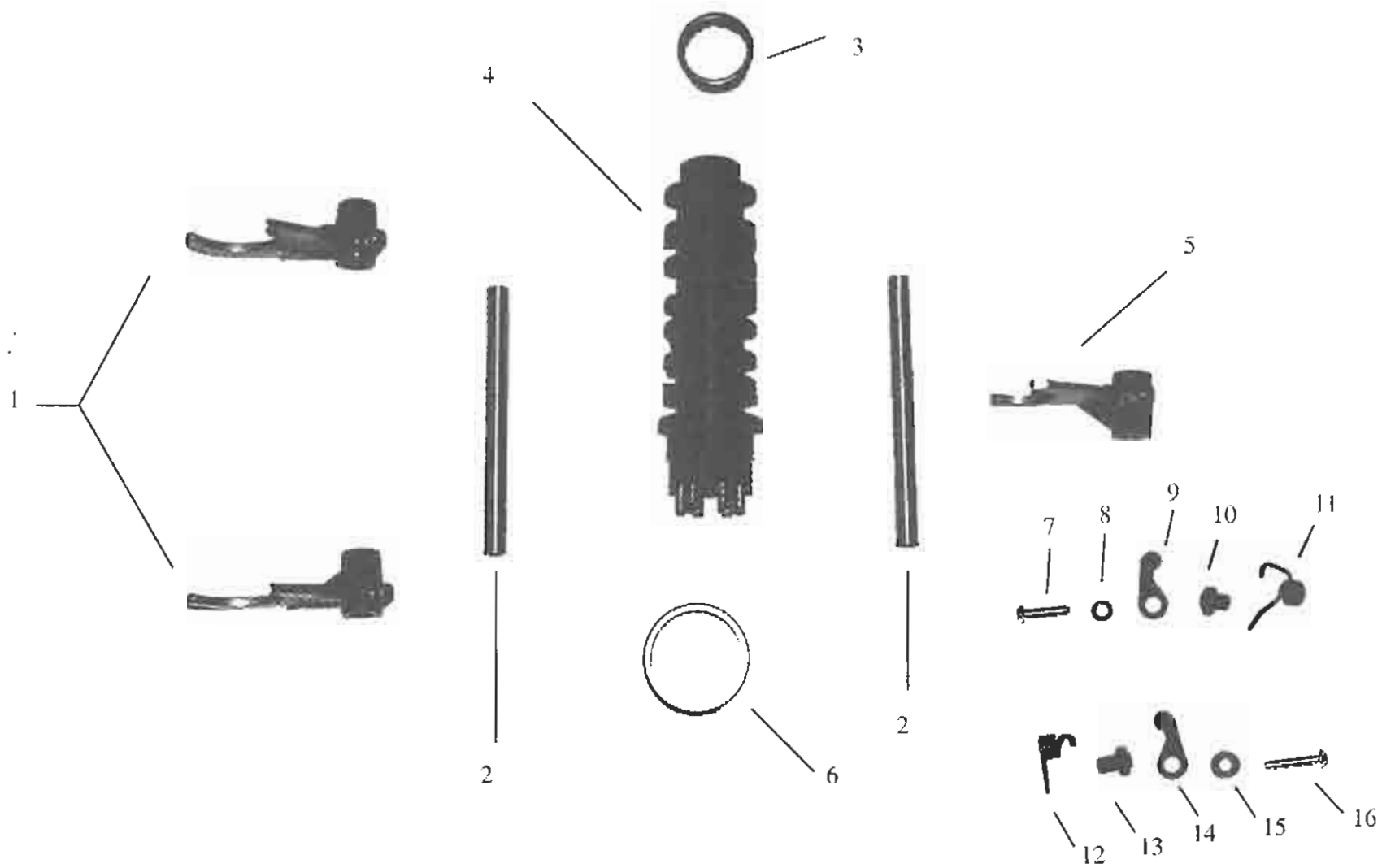

Nº	DESCRIPCION	270cc.	125cc.	200cc.	249cc.	321cc.	Cant.
1	Horquilla 1-2-3-4/ Selector fork	M03639001					2
2	Eje horquilla 107x10/ Axle selector fork	M03638001					2
3	Cojinete agujas HK25-12/ Bearing needles	M03645000					1
4	Desmodromico/ Selector baarrel	M03637001					1
5	Horquilla 5-6/ Selector fork	M03640000					1
6	Cojinete agujas HK 35-12 / Bearing needles	M03650000					1
7	ULS 6X25 / Screw.bolt uls 6x25	T05506025					1
8	Arandela plana 6x12x1.5/ Washer plane 6x12x1.5	T4006012					1
9	Conjunto fijador punto muerto / Cpt. neutral fasten	M03815110					1
10	Casquillo fijador punto muerto / Neutral fasten bushing	M03818103					1
11	Muelle fijador punto muerto / Neutral fasten spring	M03817201					1
12	Muelle fijador de marchas / Fasten gear spring	M03817100					1
13	Casquillo fijador marchas/ Fasten gear bushing	M03818104					1
14	Conjunto fijador marchas/ Cpt. fasten gear	M03815210					1
15	Arandela 6x20/ Washer 6x20	T4006020					1
16	ULS 6x30/ Screw.bolt ULS 6x30	T05506030					1

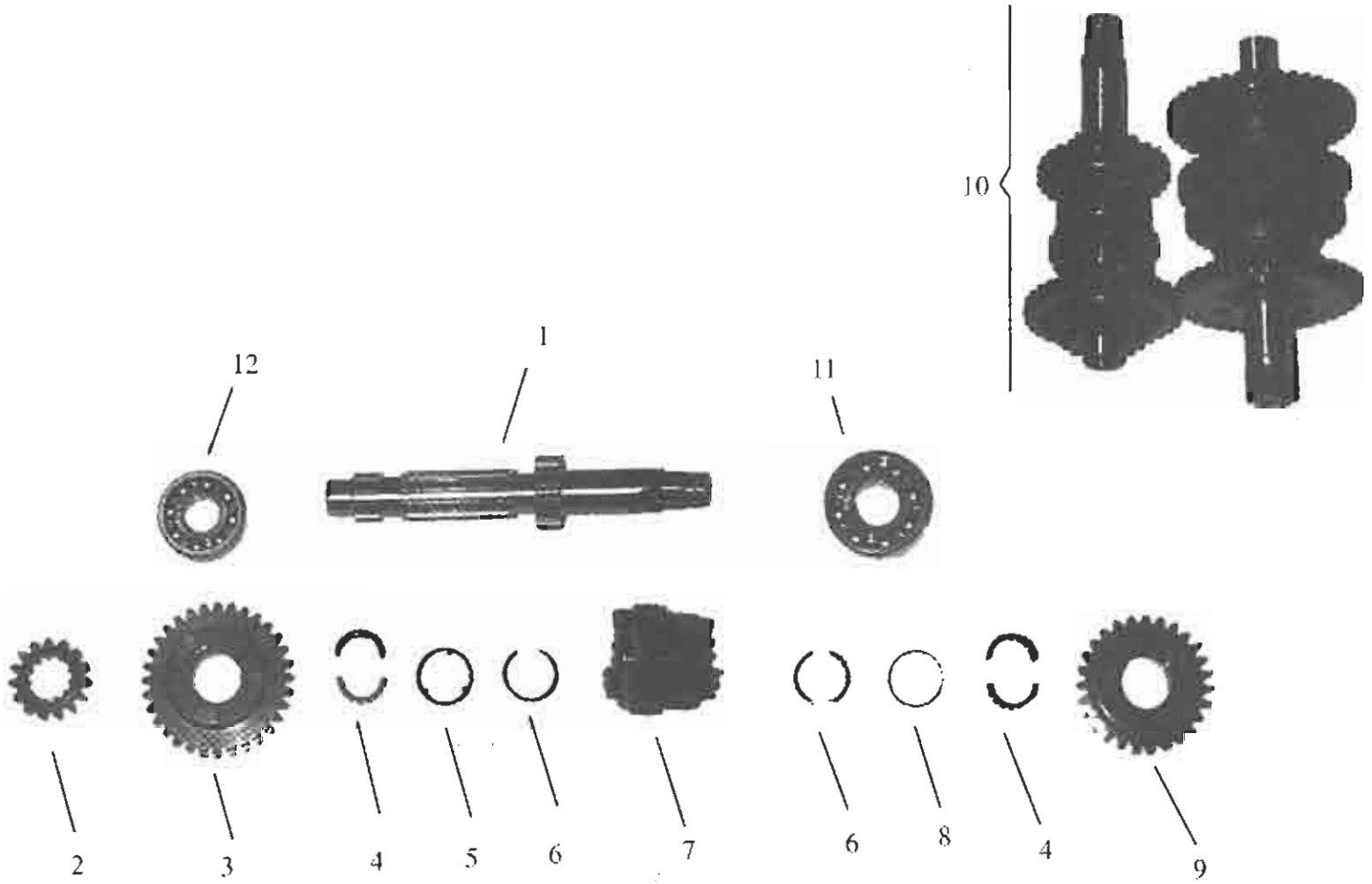
10
12
1
11
2
3
4
5
6
7
6
8
4
9

Nº	DESCRIPCION	270cc.	125cc.	200cc.	249cc.	321cc.	Cant.
1	Eje primario piñón / Axle prim. pinion	MT27836070					1
2	Piñón 2ª primario/ Pinion 2ª prim.	MT27836071					1
3	Piñón 6ª primario/ Pinion 6ª prim.	MT27836074					1
4	Cojinete agujas 18x22x10 / Bearing needles 18x22x10	M03670000					2
5	Arandela secundaria 28x22x1/ Washer secundary 28x22x1	MT27836091					1
6	Clip secundario de 22 mm. Cam. / Clip secundary 22 mm.	MT27836084					2
7	Piñón 3ª/4ª prim./ Pinion 3ª/ 4ª prim.	MT27836072					1
8	Arandela cambio 15x26x0.5 / Washer gear 15x26x0.5	MT27836093					1
9	Piñón 5ª primario/ Pinion 5ª prim.	MT27836073					1
10	Grupo cambio / Complete gear	MT27836000					1
11	Cojinete 20x47x14 (6204) / Bearing 20x47x4	M03610001					1
12	Cojinete 17x40x12 (6203) / Bearing 17x40x12	M03620000					1

TRIAL-99 -26-

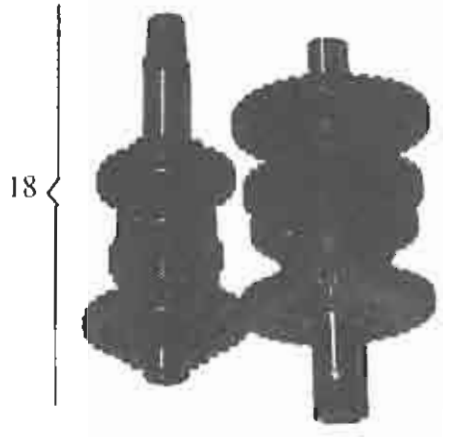

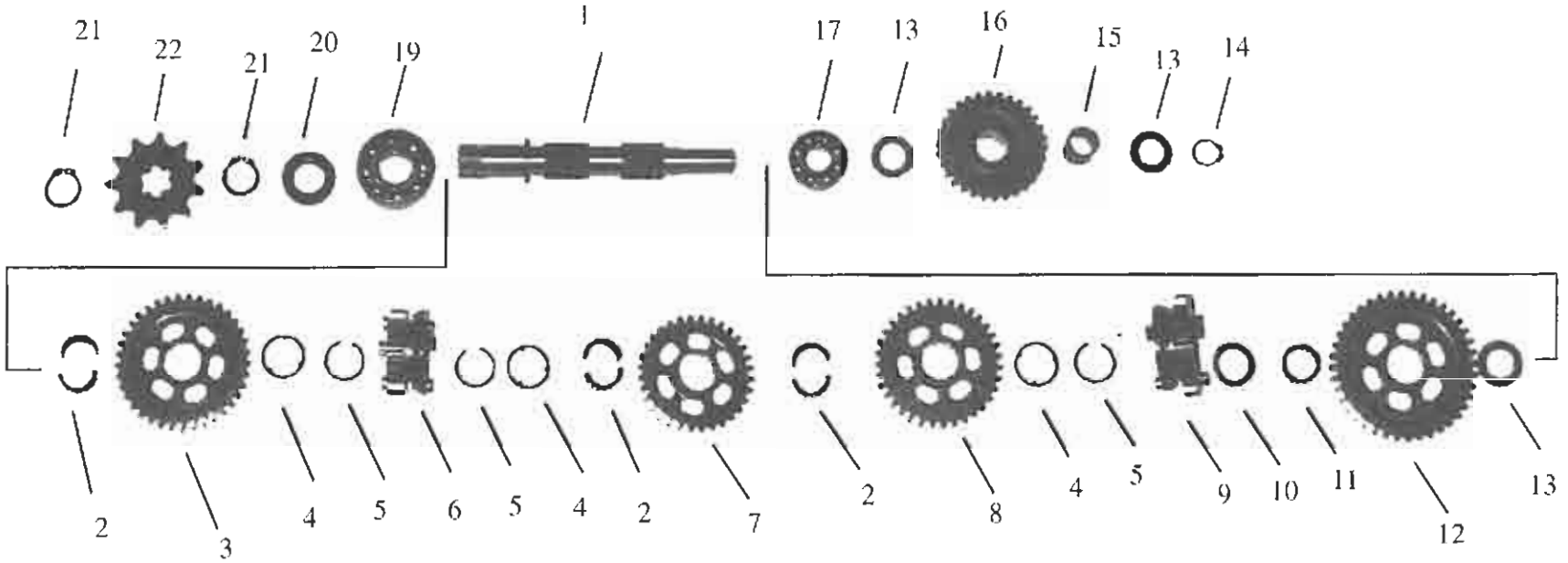

Nº	DESCRIPCION	270cc.	125cc.	200cc.	249cc.	321cc.	Cant.
1	Eje secundario / Axle secondary	MT27836075					1
2	Cojinete agujas 18x22x10 / Bearing needles 18x22x10	M03670000					3
3	Piñón secundario de 2ª / Secondary pinion 2ª	MT27836077					1
4	Arandela secundaria 28x22x1 / Washer secundary 28x22x1	MT27836091					3
5	Clip secundario de 22 mm. Cam. / Secundary clip 22 mm.	MT27836084					3
6	Piñón 6ª secun. / Secun. Pinion 6ª	MT27836081					1
7	Piñón 4ª secun. / Secun. Pinion 4ª	MT27836079					1
8	Piñón 3ª secun. / Secun. Pinion 3ª	MT27836078					1
9	Piñón 5ª secun. / Secun. Pinion 5ª	MT27836080					1
10	Arandela piñón int. 15x26x0.5 / Washer int. Pinion	MT27836093					1
11	Cojinete piñón int. Arra.K-15-19-17/ Bearing int. Pinion	M02621001					1
12	Piñón 1ª secundari / Secondary pinion 1ª	MT27836076					1
13	Arandela piñón int. 15x26x0.5 / Pinion int. Washer	M02622001					3
14	Clip de 15mm piñón int. Arra. / Pinion clip 15 mm.	M02623000					1
15	Cojinete piñón int./ Pinion bearing int.	M02621001					1
16	Piñón inter. arranque / Int. Pinion .	M02620003					1
17	Cojinete 15x35x11 (6202) / Bearing 15x35x11	M03621000					1
18	Grupo cambio / Complete gear	MT27836000					1
19	Cojinete 20x47x14 (6204) / Bearing 20x47x14	M03610001					1
20	Reten salida 20-32-7 827S / Oil seal external 20-32-7 827S	M03633000					1
21	Clip de 20 piñón salida / Pinion clip 20	MT27836052					2
22	Piñón salida / Out pinion	M03634000					1

TRIAL-99 -27-

6 mm DIA. HEAD BOLT

TORQUE 9 ft. lbs.

ESFUERZO DE TORSION (4.08 kg.)

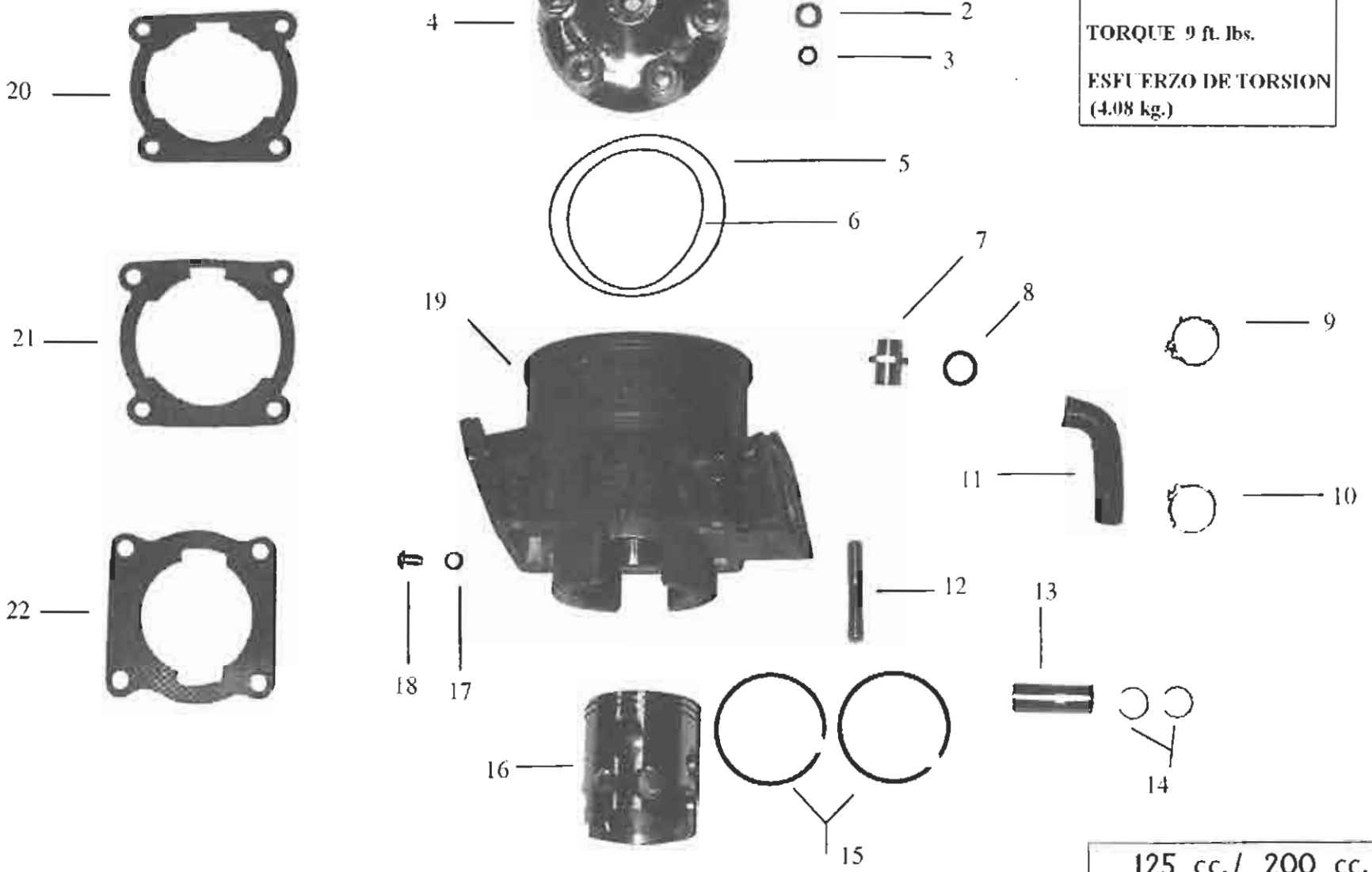

125 cc./ 200 cc.

Nº	DESCRIPCION	270cc.	125cc.	200cc.	249cc.	321cc.	Cant.
1	Allen 8x30 / Screw , bolt allen 8x30		T0308030	T0308030			6
2	Arandela plana 8x17x1.5 / Washer plane 8x17x1.5		T4008017	T4008017			6
3	Torica 7x2 / O'ring 7x2		M01612010	M01612010			6
4	Culata trial 98 / Cyl. head		MT12716000	MT20716000			1
5	Torica culata /O'ring cyl. Ext.		M01619135	M016119135			1
6	Torica culata interior / O'ring cyl. Int.		M01619130	M01619130			1
7	Racord cilindro / Racord cylinder		M01612021	M01612021			1
8	Arandela fibra 15x20x2 racord / Washer fibre 15x20x2		M01612026	M01612026			1
9	Abrazadera cobre de 19 / Clamp, clip		L200043	L200043			1
10	Abrazadera cobre-20/ Clamp, clip		L200035	L200035			1
11	Tubo agua curvado / Water tube curve		L200008	L200008			1
12	Espárrago cilindro corto / Stud. bolt cylinder		M01612005	M01612005			4
13	Bulon pistón / Pin. piston		M01419002	M01419003			2
14	Clip pistón / Clip piston		M01417052	M01417053			2
15	Aro tipo plano / Piston ring plan		M01417003	MT20716040			1
16	Conjunto pistón / Cpt. piston		M01410003	MT20716020			1
17	Arandela fibra 6x10x1.5/ Washer fibre 6x10x1.5		T4006010	T4006010			1
18	ULS 6x10 / Screw, bolt ULS 6x10		T0506010	T0506010			1
19	Cilindro 99 / Cylinder 99		MT12916022	MT20916022			1
20	Junta cilindro 0.3 mm. / Gasket cylinder		M04411003	M04411003			1
21	Junta cilindro 0.5 mm. / Gasket cylinder		MT20844000	MT20844000			1
22	Junta cilindro 1 mm. / Gasket cylinder		MT12744010	MT20844010			1

TRIAL-99 -28-

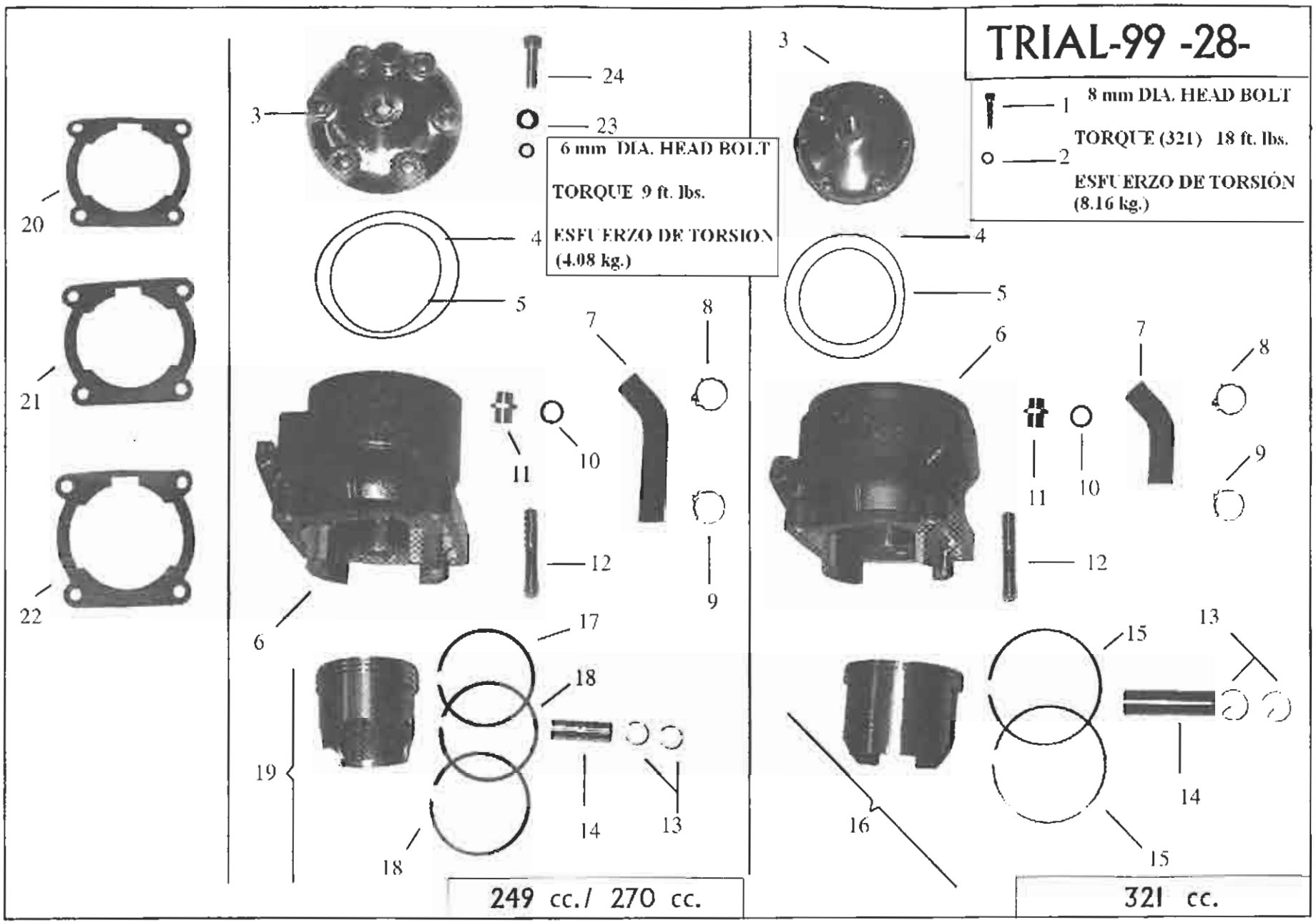
20
21
22
3
24
23
6 mm DIA. HEAD BOLT
TORQUE 9 ft. lbs.
ESFUERZO DE TORSION
(4.08 kg.)
4
5
7
8
11
10
12
9
6
17
18
19
14
13
18
249 cc./ 270 cc.
3
1
8 mm DIA. HEAD BOLT
TORQUE (321) 18 ft. lbs.
2
ESFUERZO DE TORSIÓN
(8.16 kg.)
4
5
6
7
8
11
10
9
12
15
13
16
14
15
321 cc.

Nº	DESCRIPCION	270cc.	125cc.	200cc.	249cc.	321cc.	Cant.
1	Allen 8x30 / screw, bolt allen 8x30					T0308030	6
2	Torica 7x1.5 / O'ring 7x1.5					M01612011	6
3	Culata trial / Cyl. Head	MT27816000			MT25916000	MT32916000	1
4	Torica culata / O'ring cyl. Ext.	MT27816060			MT27816060	M01619211	1
5	Torica culata interior / O'ring cyl. Int.	M01619215			M01619215	M01619216	1
6	Cilindro / Cylinder	MT27916022			MT25916022	MT32916022	1
7	Tubo agua curvado / Water tube curve	L200007			L200007	L200007	1
8	Abrazadera cobre de 19 / Clamp, clip	L200043			L200043	L200043	1
9	Abrazadera cobre de 20 / Clamp, clip	L200035			L200035	L200035	1
10	Arandela fibra 14x20x2 racord / Washer fibre	M01612026			M01612026	M01612026	1
11	Racord cilindro / Racord cylinder	M01612021			M01612021	M01612021	1
12	Espárrago cilindro largo / Stud, bolt cylinder	M01612003			M01612003	M01612003	4
13	Clip pistón / Clip piston	M01417051			M01417051	M01417050	2
14	Bulon pistón / Pin. Piston	M01419001			M01419001	M01419004	1
15	Aro pistón tipo L / Piston ring type L					M01417000	2
16	Conjunto pistón / Cpt. piston					M01410103	1
17	Aro pistón tipo L / Piston ring tipe L	M01417005			M01417002		1
18	Aro pistón tipo plano / Piston ring plan	M01417101			M01417100		2
19	Conjunto pistón / Cpt. pinston	MT27716020			MT25916020		1
20	Junta cilindro 0.1 mm. / Gasket cylinder	MT27844010			MT27844010	M04411010	1
21	Junta cilindro 0.3 mm. / Gasket cylinder	MT27844009			MT27844009	MO4411007	1
22	Junta cilindro 0.5 mm. / Gasket cylinder	MT27844000			MT27844000	M04411005	1
23	Arandela cobre 6x12 / Washer copper	T4006713			T4006713		6
24	Allen 6x25 / Screw, bolt allen 6x25	T0306025			T0306025		6

125 cc./ 200 cc.

TRIAL-99 -29-

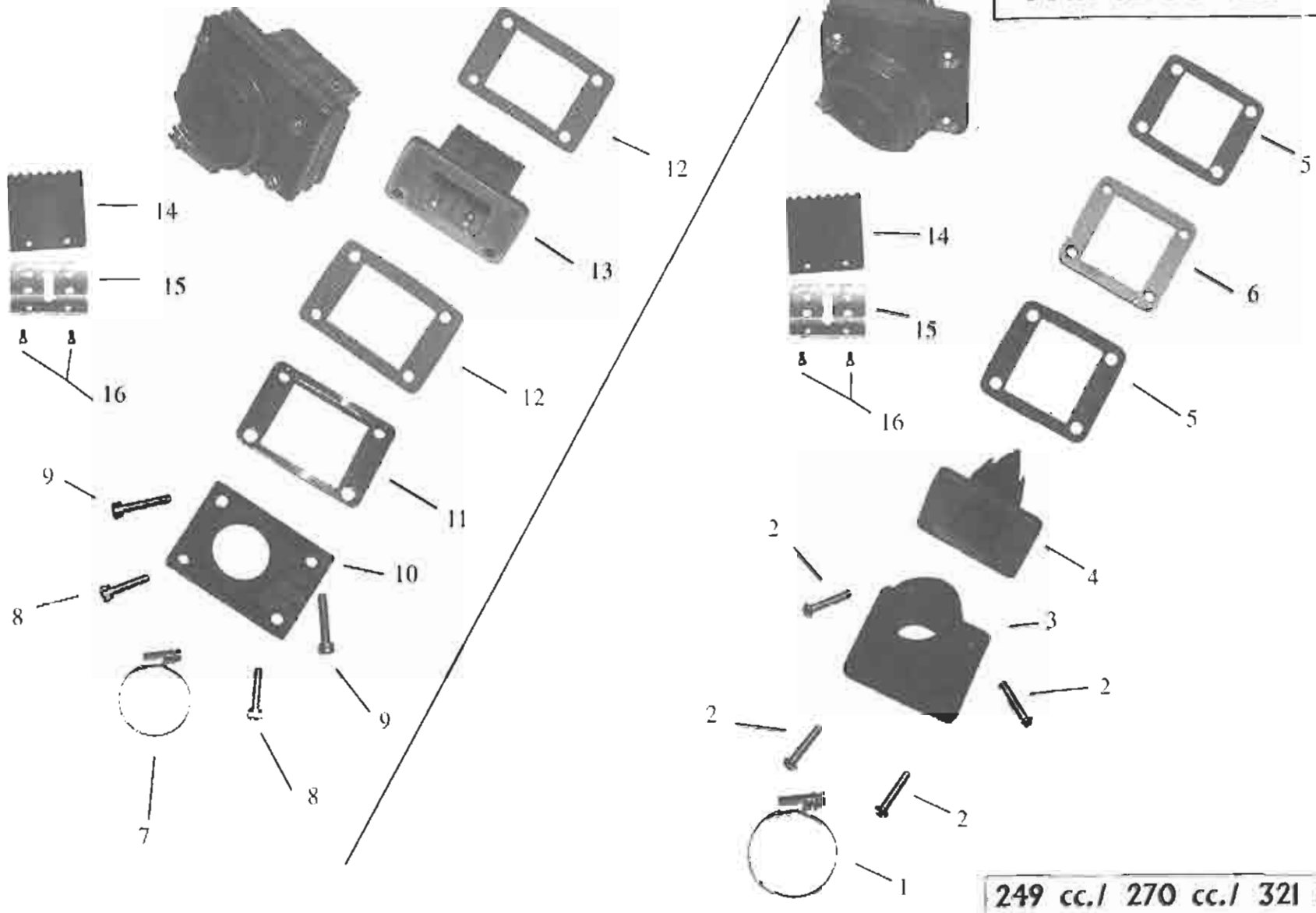

249 cc./ 270 cc./ 321 cc.

Nº	DESCRIPCION	270cc.	125cc.	200cc.	249cc.	321cc.	Cant.
1	Abrazadera 30-45 / Clamp 30-45	B640005			B640005	B640005	1
2	ULS 6x25 / Screw, bolt ULS 6x25	T0506025			T0506025	T0506025	4
3	Tubera admisión / Inlet manifold	M01615004			M01615004	M01615004	1
4	Caja de láminas / Reed block assembly	M01617200			M01617200	M01617200	1
5	Juntas tubera / Gasket inlet manifold	M04416003			M04416003	M04416003	1
6	Distan. caja lám. 249-270-321/ Distan. Reed bolck assy.	M01614005			M01614005	M01614005	1
7	Abrazadera 24-40 / Clamp 24-40		B640001	B640001			1
8	Allen 5x20 / Screw, bolt allen 5x20		T0305020	T0305020			2
9	Allen 5x25 / Screw, bolt allen 5x25		T0305025	T0305025			2
10	Tubera admisión 125-200 / Inlet manifold		M01615003	M01615003			1
11	Distan. caja lám. 125-200 / Distan reed block assy. 125-200		M01618000	M01618000			1
12	Juntas tubera 125-200 / Gasket inlet manifold 125-200		M04416002	M04416002			1
13	Caja de láminas 125-200 / Reed block assembly 125-200		M01617000	M01617000			1
14	Juego de láminas / Reeds petal assembly	M01616000					1
15	Topes láminas / Rev plate reeds petal	M01616010					2
16	Tornillo philips láminas M4x8 / Screw, bolt philips reeds	T0604008					4

TRIAL-99 -30-

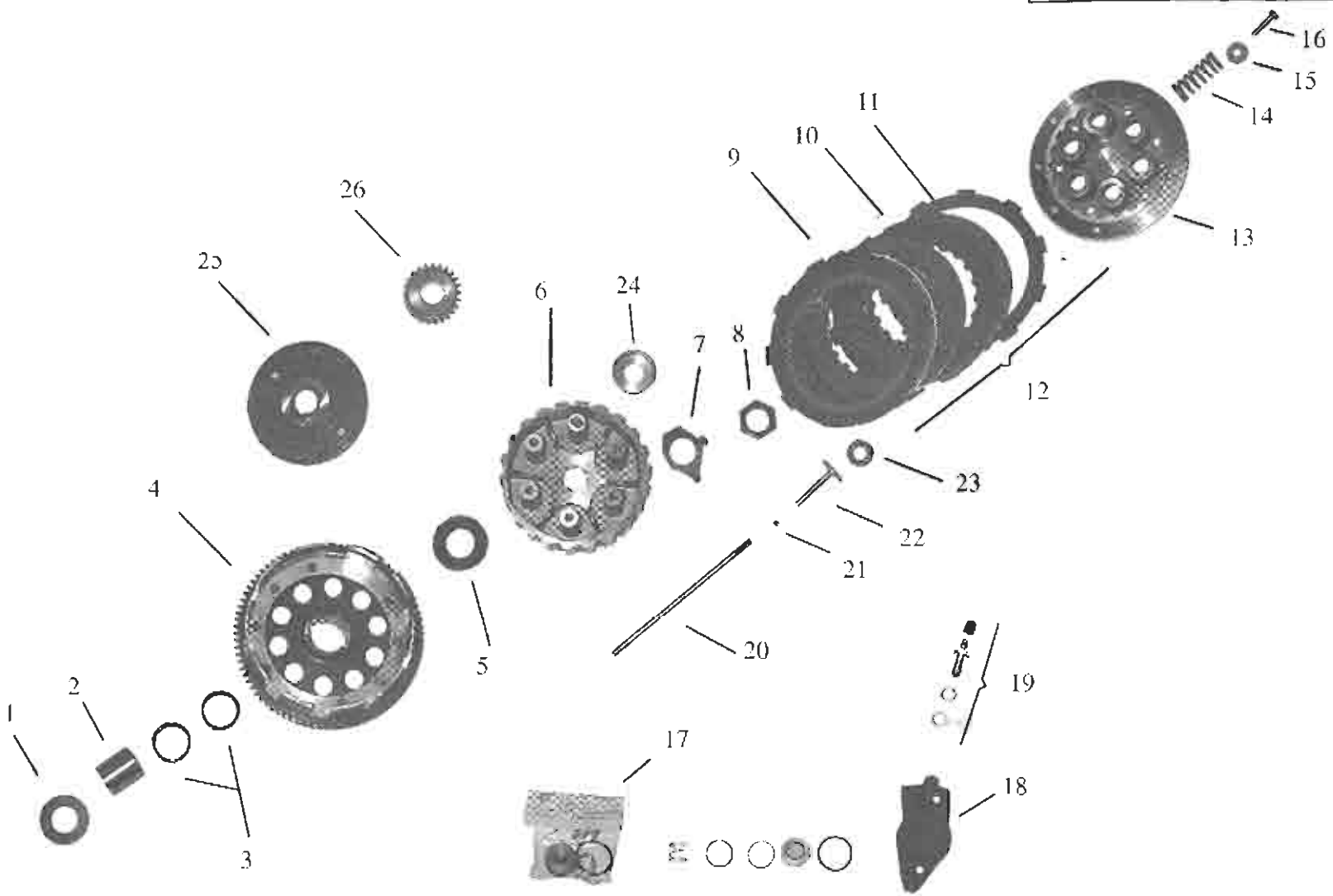

Nº	DESCRIPCION	270cc.	125cc.	200cc.	249cc.	321cc.	Cant.
1	Arandela 20.15x38x3.25 / Washer cover	M03226000					1
2	Casquillo embrague 20x26x28.6 / Pivot. bush clutch	M03224000					1
3	Cojinete agujas K26-30-13 / Bearing needles	M03225000					2
4	Corona embrague / Helical gear set assy	M03210002					1
5	Arandela intermedio 17.5x34x1 / Washer intermediate	M03223000					1
6	Cubo embrague 98 / Hub. clutch	MT27832005					1
7	Arandela fijación cubo / washer lock hub		M03222001	M03222001			1
8	Tuerca fijación cubo bal.piñon / Nut fij. Hub bal. pinion	M03221000					1
9	Disco embrague mixto / Clutch disk mixed	MT27732053					1
10	Disco embrague hierro / Clutch disk iron	MT27732052					5
11	Disco embrague forrado / Clutch disk lined	MT27732051					6
12	Cto.discos embrague 98 / Cpt. clutch disk	MT27732050					1
13	Plato embrague 98 / Clutch plate	MT27832006					1
14	Muelle embrague / Clutch spring	M03216002					6
15	Arandela muelle emb. 17x5x1.5 / Washer clutch spring	M03218001					6
16	Hexagonal 5x20 (12.9) DIN 933 / Hexagonal	T0105020					6
17	Kit pinza embrague hidráulico / Kit caliper clutch hydraulic	M01059000					1
18	Pinza embrague hidráulico / Caliper clutch hydraulic	M01050000					1
19	Racord pinza embrague hidrau. / Bleed screw. union bolt	M01060000					1
20	Varilla embrague hidráulico / Push rod clutch hydraulic	M03228002					1
21	Bola varilla embrague 5mm / Ball bearind clutch	M03235001					1
22	Bolet varilla embrague / Mushroom adjuster clutch	M03233000					1
23	Coj.prensa embrague AX1022 / Bearing clutch end plate	M03234001					1
24	Casq. Cent. prensa embr. / Bushing centralize clutch press	MT27832052			MT27832052	MT27832052	1
25	Piñón contrapeso / Counterweight pinion	M03210000					1
26	Piñón transmisión primaria / Transmission primary pinion	M03210001					1

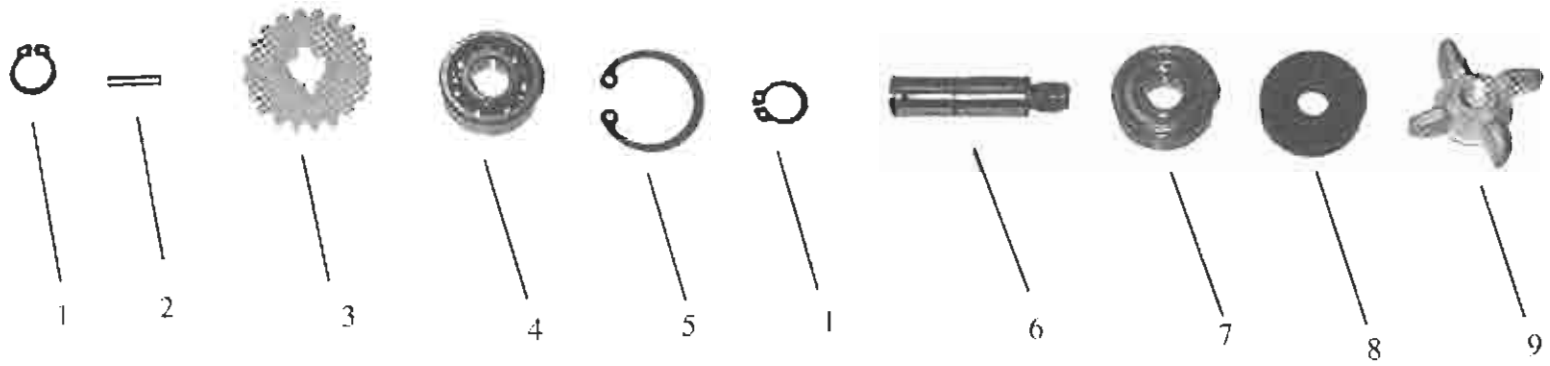
1
2
3
4
5
1
6
7
8
9

Nº	DESCRIPCION	270cc.	125cc.	200cc.	249cc.	321cc.	Cant.
1	Seeger de 10 eje bomba / Spindle pump. seeger 10	M03314011					1
2	Rodillo 3x14 bomba agua/ Pump water roller 3x14	MT27710036					1
3	Piñón mando bomba agua /Control pinion water	M01230000					1
4	Cojinetes turbina 600C3 bom. / Turbine bearing 600C3	M03313000					1
5	Seeger int. 26 gru.tope cojinetes / Int. Seeger 26	M03314012					1
6	Eje turbina 98 / Axle turbine 98	MT27710006					1
7	Cojin. 6000 Z c3 bomb. agua / Bearing water pump	M03313001					1
8	Reten 12*26*7ª duo FPM Viton / Water pump seal	M01012121					1
9	Turbina / Turbine	M03310000					1

TRIAL-99 -32-

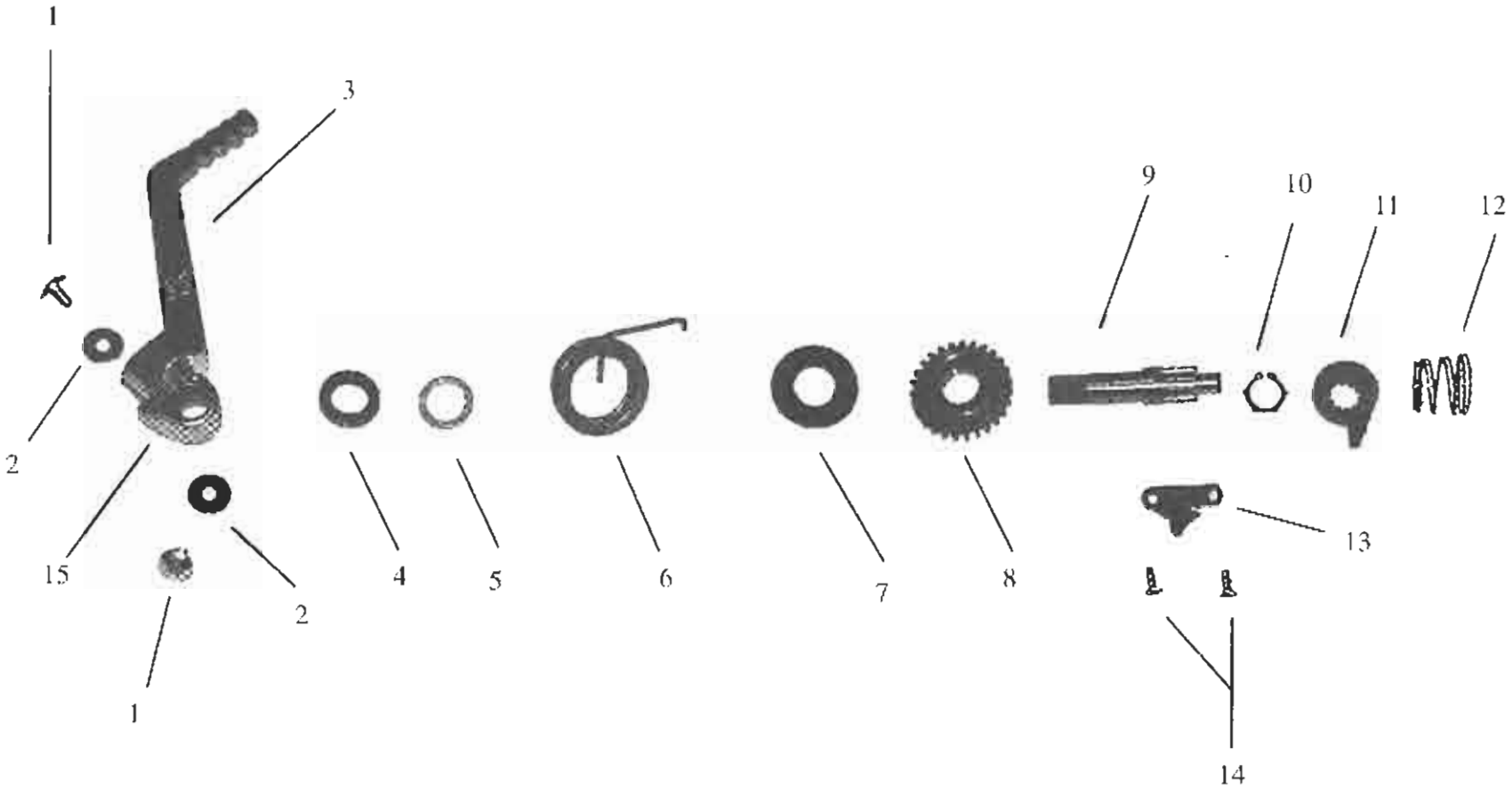

Nº	DESCRIPCION	270cc.	125cc.	200cc.	249cc.	321cc.	Cant.
1	Tornillo 6x12 cabota tork / Screw. bolt allen special	T0316012					2
2	Arandela 6x18x1.5 DIN 9021 / Washer plane 6x18x1.5	T4006018					2
3	Cto.pedal arranque alum.D.18 / Cpt. Kickstart pedal	M02610102					1
4	Reten arranque 18-28-7 822N / Oil seal kickstart	M02627001					1
5	Tope aluminio 4.5x18x25 arran. / Top aluminium kickstart	M02612002					1
6	Muelle retorno pedal / Pedal come back spring	MT27836007					1
7	Arandela arranque 46x18.6x1 / Washer kickstart	M02614002					1
8	Piñón arranque / Pinion kickstart	MT27836002					1
9	Eje arranque 98 / Kickstart axle	MT27836003					1
10	Seeger E20 DIN983 / Seeger E20	MT27836052					1
11	Trinquete arranque / Kickstart pawl	ME25636004					1
12	Muelle trinquete arranque / Kickstart pawl spring	ME25636006					1
13	Platina trinquete arranque 98 / Kickstart pawl worktable	MT27836005					1
14	Hexagonal 5x20 (12.9) DIN 933 / Hexagonal 5x20	T0105020					2
15	Muñequilla arranque D.18 / Kickstart trunnion	M02610052					1

TRIAL-99 -33-

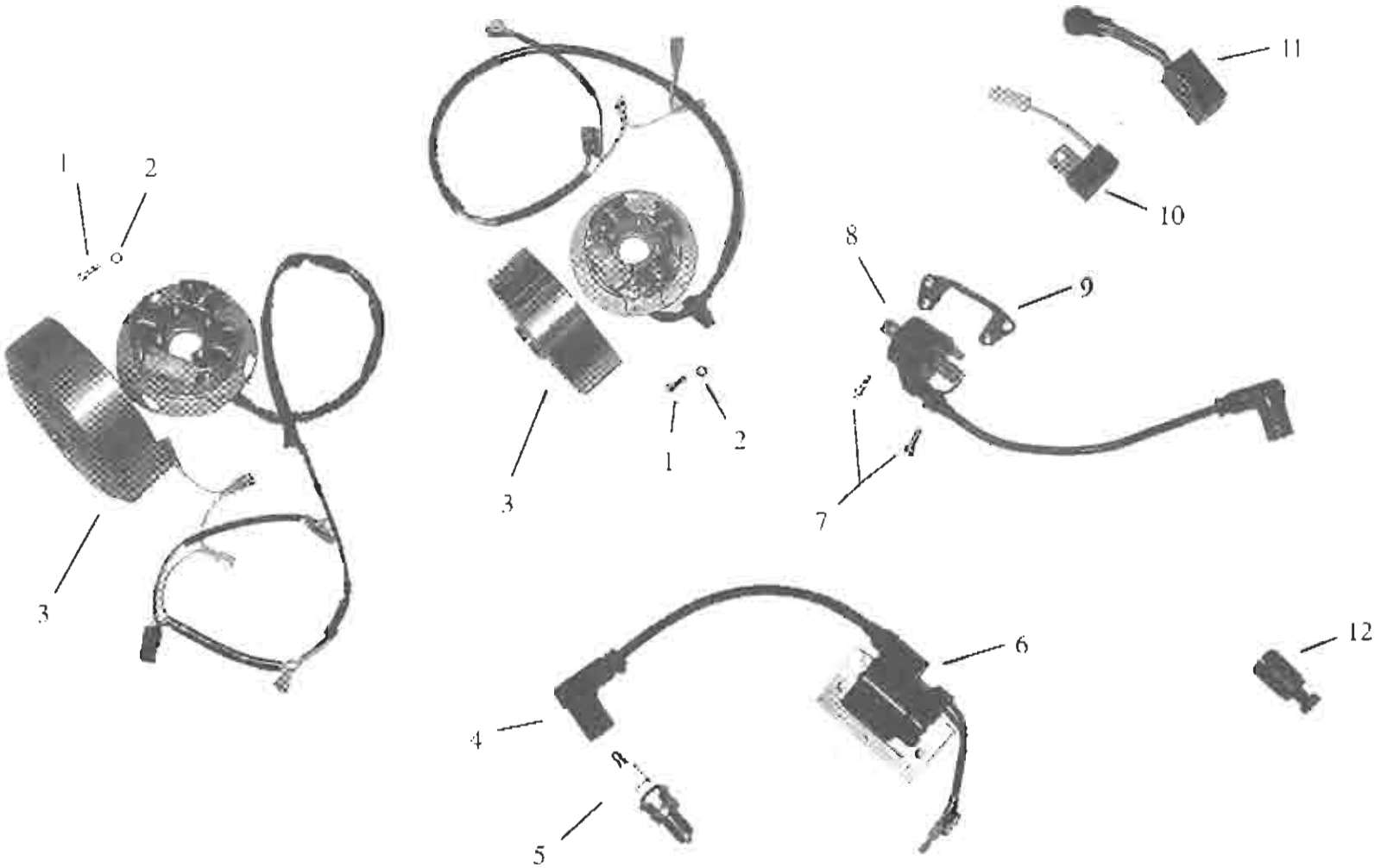

Nº	DESCRIPCION	270cc.	125cc.	200cc.	249cc.	321cc.	Cant.
1	Allen 5x15 8.8 / Screw. bolt allen	T0305015					3
2	Arandela 5x10x1 DIN 125 / Washer 5x10x1	T4005010					3
3	Volante encendido / Ignition comp.	M02810110	M02810120	M02810125	M02810110	M02810110	1
4	Pipa de bujía / Cap. Spark plug	BT27934000					1
5	Bujía NGK BPR5 ES/ Spark plug	M04012000					1
6	Bobina 270-321/ Ignition coil 270-321	MT27834006				MT27834006	1
7	Allen 6x14 / Screw. bolt allen		T0306014	T0306014	T0306014		2
8	Bobina 125-200-249/ Ignition coil 125-200-249		M02812110	M02812110	M02812110		1
9	Sop.bobina / Ignition coil support		BT20934026	BT20934026	BT20934026		1
10	Regulador alternador 415 C / Alternator regulator	L300031					1
11	CDI / CDI	M02812103					1
12	Extractor volante magnético / Extractor ignition mag.	M04015001					1

TRIAL-99 -34-

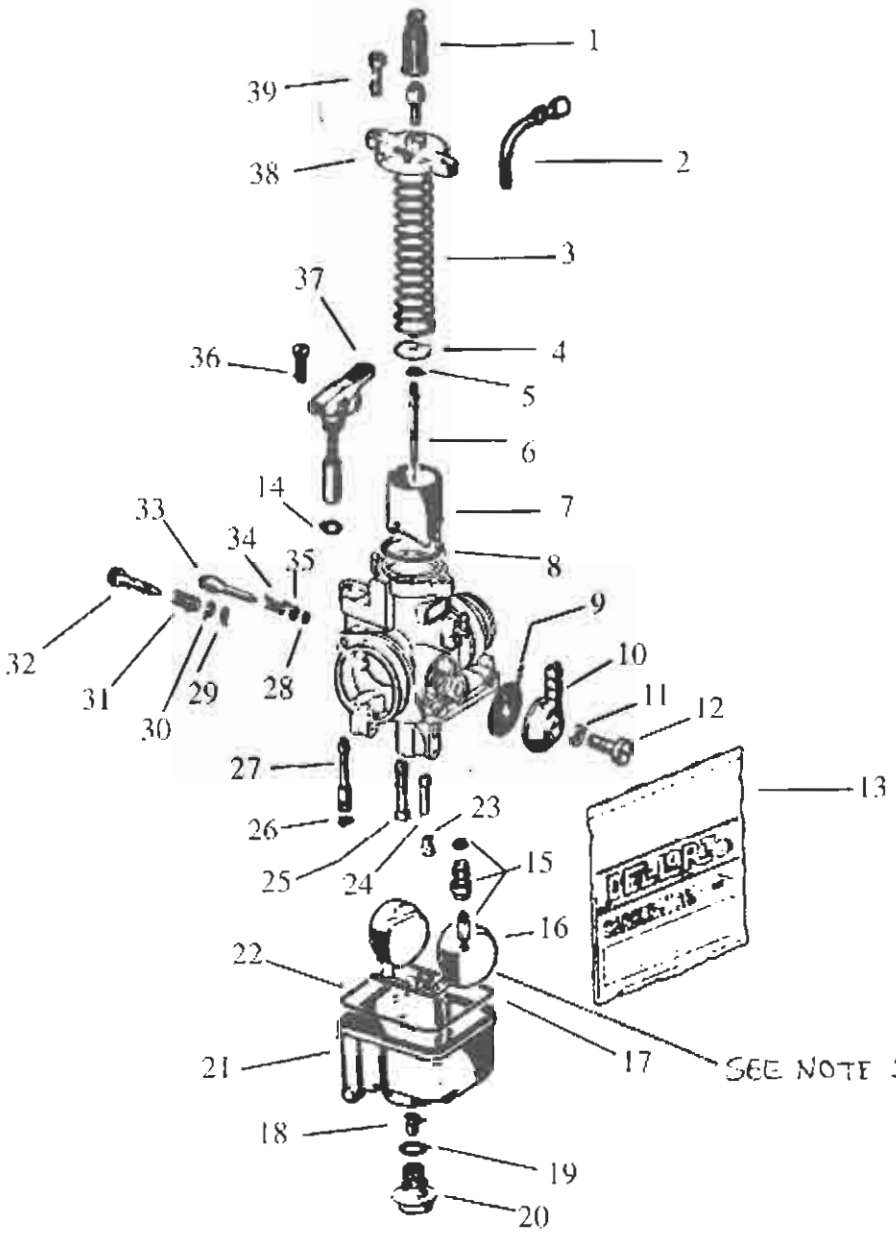
1
39
38
2
3
37
36
4
5
6
14
7
33
34
35
8
32
31
30
29
28
9
10
11
12
27
13
26
25
24
23
15
16
22
21
17
18
19
20
SEE NOTE 1 FOR FLOAT INFO

40

Nº	DESCRIPCION	270cc.	125cc.	200cc.	249cc.	321cc.	Cant.
1	Capuchón tensor cable gas / Adjuster tension cable gas	M09001055					1
2	Tensor cable gas / Tensioner cable gas	M09001032					1
3	Muelle compuerta / Spring slide, valve	M09001015					1
4	Plancha sujeción cable gas / Plate subjection	M09001010					1
5	Clip aguja / Clip. needle	M09001020					1
6	Aguja D36 3º punto / Needle D36	M09003036				M09003118	1
7	Compuerta D-60 / Slide, valve D-60	M09002060				M09002045	1
8	Tórica tapa carburador / O'ring cover carburettor	M09001050					1
9	Junta pipeta gasolina / Pipette sela fuel	M09001095					1
10	Pipeta entrada gasolina / Pipette entry fuel	M09001135					1
11	Junta tornillo pipeta / Gasket screw, bolt pipette	M09001100					1
12	Tornillo pipeta / Screw,bolt pipette	M09001140					1
13	Kit juntas carburador / Kit gasket carburettor	M09001101					1
14	Tóricas starter / O'rings starter	M09001065					1
15	Válvula flotador / Float valve	~~M09003136~~ M09001200					1
16	Flotador 2x2, 8gr. / Float 2x2, 8gr.	M09008028 – NOTE 1 – SEE BELOW					2
17	Eje flotador / Float axle	M09001145					1
18	Chicle principal 118 / Main jet	M09006118	M09006122			M09006120	1
19	Tórica tapón cubeta / O'ring cover dish	M09001090					1
20	Tapón cubeta gasolina / Cover dish fuel	M09001155					1
21	Cubeta gasolina / Fuel dish	M09001150					1
22	Tórica cubeta gasolina / O'ring fuel dish	M09001085					1
23	Chicle ralentí 30 / Jet, slow 30	M09004030					1
24	Chicle ralentí 50 / Jet, slow 50					M09004050	1
25	Emulsor AQ 270 / Needle jet AQ 270	M09005270				M09005269	1
26	Tórica chicle starter / O'ring jet starter	M09001070					1
27	Chicle starter 60 / Jet starter 60	M09007060					1
28	Tórica tornillo regulador aire / O'ring screw, bolt reg. air	M09001075					1
29	Tórica torn. reg. Comp. / O'ring screw, bolt reg. Slide/valve	M09001060					1

Nº	DESCRIPCION	270cc.	125cc.	200cc.	249cc.	321cc.	Cant.
30	Arand. tornillo reg. Compt. / Washer screw reg. Slide,valve	M09001045					1
31	Muelle tornillo reg. Comp. / Spring screw,, bolt reg. slide	M09001040					1
32	Tornillo regulador compuerta / Screw, bolt reg. slide	M09001035					1
33	Tornillo reg. Entrada aire / Screw, bolt reg.entrance	M09001115					1
34	Muelle tornillo regulador aire / Spring screw, bolt reg. air	M09001120					1
35	Arandela torn. Reg. Aire / Washer screw,bolt reg. air	M09001125					1
36	Tornillo sujeción starter / Screw, bolt subjection starter	M09001110					1
37	Mando starter / Control starter	M09001105					1
38	Tapa carburador / Cover carburettor	M09001156					1
39	Tornillo tapa carburador / Screw, bolt cover carburettor	M09001025					2
40	Carburador PHBL 26 / Carburettor PHBL 26	M09000203	MT20990000	MT20990000	MT25990000	M09000203	1

KOKUSAN SYSTEM

(SYSTEMA ELECTRONICO KOKUSAN)

APPLICATION: GASGAS

MODEL 1996, 1997, 1998, 1999, 2000

GASGAS

Rising Sun Imports Inc.

United States of America

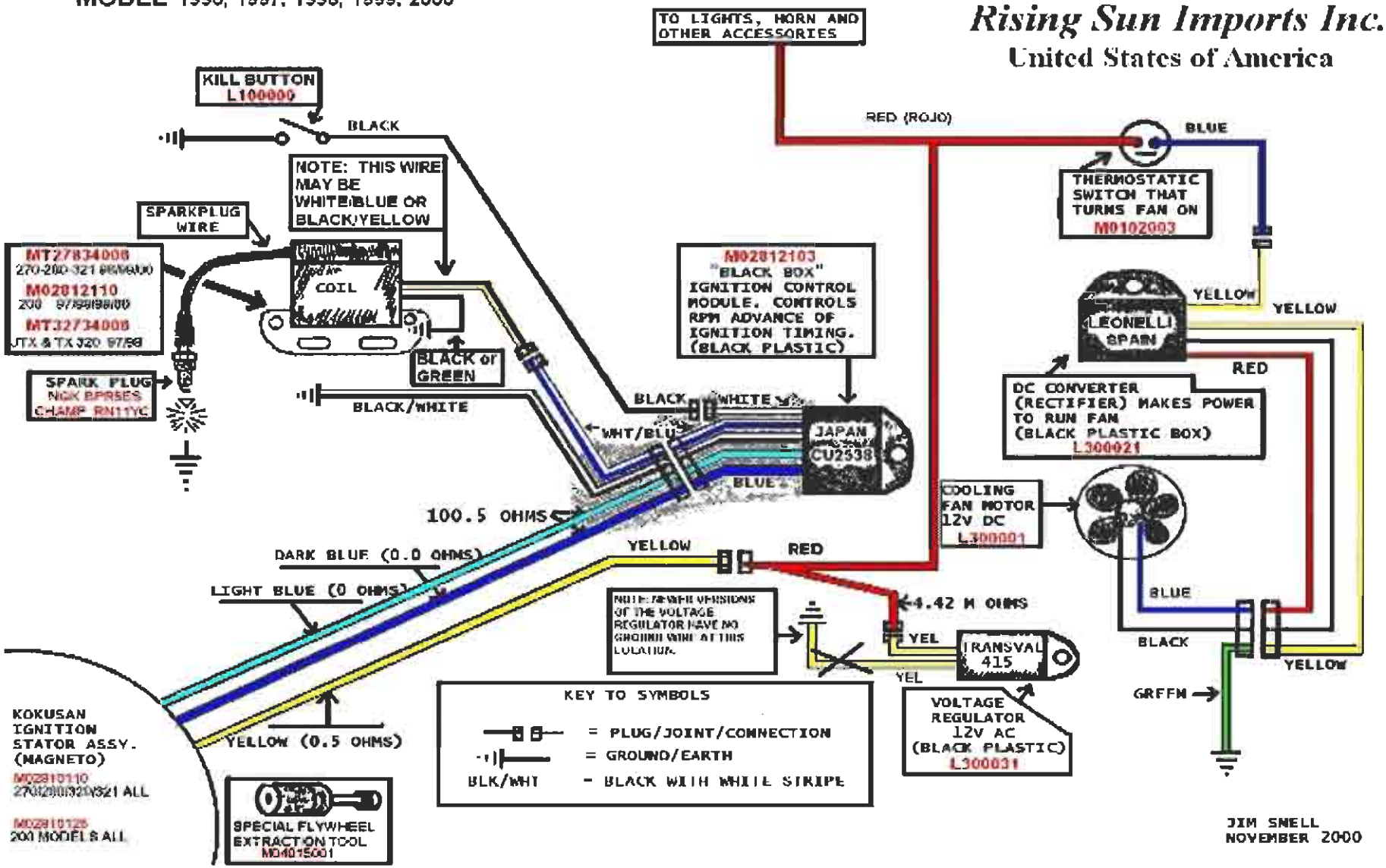

JIM SNELL
NOVEMBER 2000

CARBURETOR SETTINGS USA

1999 TXT 250 - 270 - 321

WITH PHBL26 (26mm) SEA LEVEL TO 3,000 FEET
MAIN: 114
PILOT: 36 (38 OK)
NEEDLE: D36 (2nd CLIP POSITION DOWN FROM TOP)
FUEL SCREW: 3.5 TURNS OUT
FLOAT HEIGHT: ARMS IN LEVEL PLANE WITH FLOAT BOWL BASE (PARALLEL)

KEIHIN PWKGG28 (28mm) CARBURETOR SPECS:
MAIN: 118 (120, 122, 125 OK)
PILOT: 48 (45 OK)
NEEDLE: CENTER POSITION OF FIVE. (THIRD DOWN FROM TOP)
SLIDE: 35
AIR SCREW: 1.5 TURNS OUT (NOTE: THIS IS AN AIR SCREW)

NEEDLE: X17 (TOP CLIP POSITION)
SLIDE: 70